Panasonic

Operating Instructions

Host Computer System

High-Speed Axial Lead Component Insertion Machine

AV131

Model No. **NM-EJA2A**
NM-EJA3A

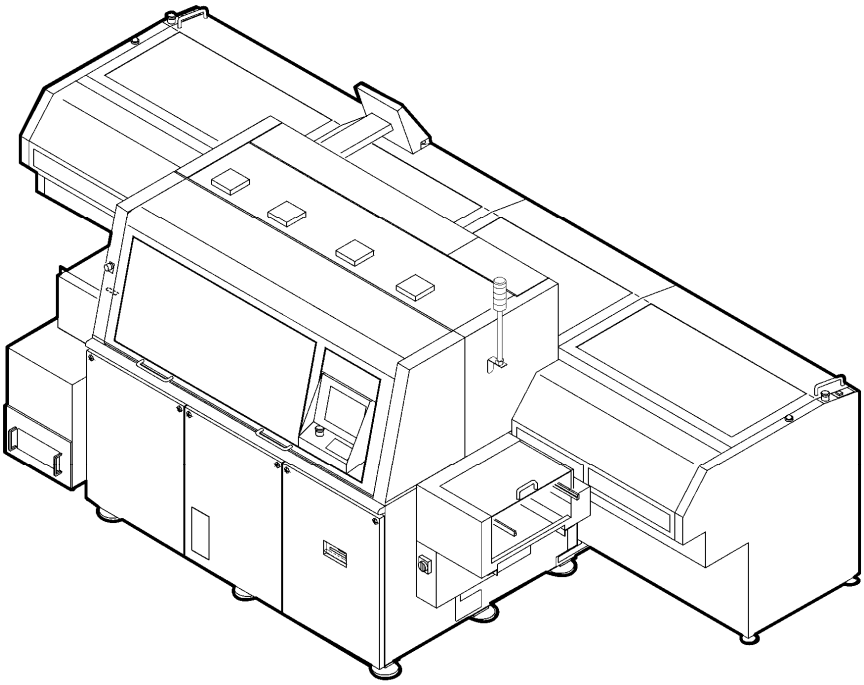

Thank you for purchasing AV131, the high-speed axial lead component insertion machine.
Before placing the machine in service, be sure to read the instruction manual for proper usage.
After that, store it carefully and read it if necessary.

N7201A726E00

Marking Samples for Product Safety

Identification for HHS (U.S.A.)
Manufactured: xxxx(xx),xxxx
Panasonic Factory Solutions Co., Ltd.
Kadoma, Osaka, 571-8502, Japan
Certification for HHS (U.S.A.)
Complies with FDA radiation performance standards, 21 CFR Sub-chapter J.
PS0004E2

HHS-Mark for U.S.A.

CE
TÜV PRODUCT SERVICE
Classification of ISM equipment: Group 1 Class A
Panasonic Factory Solutions Co., Ltd.
Kadoma, Osaka, 571-8502, Japan
PS0002E2

CE-Mark

USAGE OF WARNING SHEETS IN MAINTENANCE

Before performing maintenance, affix the included warning sheets (see below) to prominent positions, such as the operating panel or the vicinity of it, for safety.
During the maintenance by two or more persons in particular, as well as using these warning sheets to ensure safety, be sure to send signals to each other.

This warning sheet uses a magnet. Do not use it or store it near magnetic media or any other items susceptible to magnetic influence.

Use of this machine:
This machine is designed and constructed to be used for placing electric and electronic components on PCB.
This machine shall be used for this purpose only.

It shall not be used for any other purpose.

Operation of this machine:
This machine shall be operated by professional, specially trained operators.

It shall not be operated by non-professional, not specially trained operators.

Regarding the training course, please contact Panasonic Factory Solutions Co., Ltd. or PFSE.

⚠ WARNING

Do not allow any person who has not received special training to operate the machine.

Prohibition

The machine many be operated improperly, causing injury.

- Either carry out training by yourself of consult us.

Machine was manufactured by: Panasonic Factory Solutions Co., Ltd.

441-13, Nagahasu, Tateishi-cho, Tosu, Saga 841-8585, Japan
Phone number: +81-942-84-2644
Fax number: +81-942-84-2636

For Service and Supply of Spares in Europe
you may contact Panasonic Europe:

Continental Europe
PFSE
Panasonic Factory Solutions Europe
Winsbergring 15
22525 HamburgGermany
Phone number: 0049-(0)40-85386-321
Fax number: 0049-(0)40-85386-332

United Kingdom
PFSE
Panasonic Factory Solutions Europe
Panasonic House,Willoughby Road
Bracknell, Berks. RG12 8 FP
Phone number: 0044-(0)1344-853267
Fax number: 0044-(0)1344-425970

Year: 2008 CE

Table of Contents

1. HOST COMPUTER SYSTEM INTERFACE SPECIFICATIONS ·· 1-1

1.1. RS-232C 1.1-1
1.1.1 Introduction 1.1-1
1.1.2 Standard Interface Specifications 1.1-1
1.1.3 External Connection Specification for the Machine 1.1-1
1.1.4 Basic Transmission Timing of Transmission Unit 1.1-2
1.2. PanaProtocol and Command Specifications 1.2-1
1.2.1 Message Format 1.2-1
1.3. Command Description 1.3-1
1.3.1 C Commands (C0, C1, C2, C3, C4, C5) 1.3-1
1.3.2 A Commands (A0, A1, A2, A3, A4) 1.3-1
1.3.3 Data Command (D0) 1.3-4
1.3.4 D Command (D1) 1.3-4

2. DOWNLOADING PROGRAM ····· 2-1

2.1. Downloading NC Data 2.1-1
2.1.1 Downloading NC Data 2.1-1
2.2. Downloading Parts Data 2.2-1
2.2.1 Downloading Parts Data 2.2-1
2.3. Downloading P.C.B. Data 2.3-1
2.3.1 Downloading P.C.B. Data 2.3-1
2.4. Downloading Program Offset 2.4-1
2.4.1 Downloading Program Offset 2.4-1

3. UPLOADING PROGRAMS ····· 3-1

3.1. Uploading NC Data 3.1-1
3.1.1 Uploading NC Data 3.1-1
3.2. Uploading Parts Data 3.2-1
3.2.1 Uploading Parts Data 3.2-1
3.3. Uploading P.C.B. Data 3.3-1
3.3.1 Uploading P.C.B. Data 3.3-1
3.4. Uploading Program Offset 3.4-1
3.4.1 Uploading Program Offset 3.4-1
3.5. Uploading Production Information (Machine) 3.5-1
3.5.1 Uploading Production Information (Machine) 3.5-1
3.6. Uploading Production Information (NC) 3.6-1

3.6.1 Uploading Production Information (NC) 3.6-1
3.7. Uploading Feeder Information 3.7-1
3.7.1 Uploading Feeder Information 3.7-1
3.8. Uploading Rotary Chuck Information 3.8-1
3.8.1 Uploading Rotary Chuck Information 3.8-1
3.9. Uploading NC Program Directory 3.9-1
3.9.1 Uploading NC Program Directory 3.9-1
3.10. Uploading P.C.B. Data Directory 3.10-1
3.10.1 Uploading P.C.B. Data Directory 3.10-1
3.11. Uploading Z Division Mode and L/R Selection 3.11-1
3.11.1 Uploading Z Division Mode and L/R Selection 3.11-1
3.12. Uploading Parts Data Directory 3.12-1
3.12.1 Uploading Parts Data Directory 3.12-1
4. INQUIRING AND ALTERING PROGRAMS 4-1
4.1. Inquiring and Altering NC Program Name 4.1-1
4.1.1 Inquiring and Altering NC Program Name 4.1-1
4.2. Inquiring and Altering Parts Program Name 4.2-1
4.2.1 Inquiring and Altering Parts Program Name 4.2-1
5. MACHINE CONTROL 5-1
5.1. C5 Remote Control: C5 ..... 5.1-1
5.2. R Commands: R0,R1,R2,R3 ..... 5.2-1
5.2.1 Production Quantity Information: R0 ..... 5.2-1
5.2.2 Operation mode information: R1 ..... 5.2-3
5.2.3 Machine Error Information: R2 ..... 5.2-5
5.2.4 Recovery Result Information : R3 ..... 5.2-6
6. SPC 6-1
6.1. General 6.1-1
6.2. Commands Description 6.2-1
6.2.1 R1RU 6.2-1
6.2.2 R1RD 6.2-1
6.2.3 C0RP 6.2-2
6.2.4 C0RD 6.2-3
6.2.5 C0RC 6.2-4
6.2.6 C2ST 6.2-5
6.2.7 C3P 6.2-6
6.2.8 C3D 6.2-7
6.2.9 C3C 6.2-8

6.2.10 C3U 6.2-9
6.2.11 C5BD 6.2-10
7. APPENDIX 7-1
7.1. AV131 HOST Command Table 7.1-1

1. HOST COMPUTER SYSTEM INTERFACE SPECIFICATIONS

1.1. RS-232C

D79HEC-51-010-A0

1.1.1 Introduction

This manual is used when the machine is operated by a host computer and it is mainly focused on the connecting interface. It has no relationship to the performance of the machine. Rather, it is concerned with connection of RS-232C interface. If controlling the machine in groups, determine specification after thoroughly reading this manual.
This manual is written for use with AV131.

=REMARKS=

Be aware that contents of this manual are subject to change without prior notice.

1.1.2 Standard Interface Specifications

Interface	EIA standard RS-232C				
Number of channels	1 channel <DTE specifications, 25-pin connector (socket) output>				
Synchronizing type	Asynchronous mode/Start-stop synchronous type				
Communication system	Duplex/(half duplex) However, protocol is handshaking system.				
Transfer speed	2,400 / 4,800 / 9,600 / 19,200 bps				
Bit pattern	Start	Data	Parity	Stop	Total
	1	7	1	1	10
Error control system	Vertical parity check <even parity>				
Bit transfer order	Low position first <from LSB>				

1.1.3 External Connection Specification for the Machine

■ Communication Circuit

There is only one circuit from AV131. Since the voltage system is adopted, for medium distance or long distance transmission (telephone circuit), it is necessary to set a modem at the output of AV131.
The transmission distance of RS-232C, without a modem, is shorter than 15m (50 feet) as it is the transmission circuit of the unbalanced circuit.
Actually, up to 30m can be covered, but it varies with the various conditions, so it would be preferable to consult us if questions arise.

■ Communication System

The start-stop synchronous type and full duplex communication system.
However, protocol is handshaking system.

■ Communication Speed

The baud rate is changeable and the following settings are possible:

2400 4800 9600 19200 bps

However, standard setting is 4800 bps.

■ Connectors

Connected using 25-pin AM205208-1 mounted to the front panel of the P783K controller.

■ Transmission Unit Configuration

The transmission unit as shown in the following figure is composed of 1 start bit, 7 data bits, 1 parity bit and 1 stop bit; namely 10 bits in total.

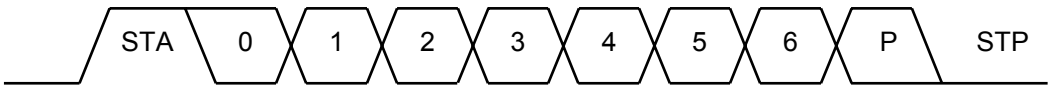

■ Control Code

In the transmission unit, ASCII code with parity is used. The following is the chart of ASCII code.

Bit (7 bit) bbbb 3210 ↓↓↓↓	b6 →		0	0	0	0	1	1	1	1
	b5 →		0	0	1	1	0	0	1	1
	b4 →		0	1	0	1	0	1	0	1
		Hex-adec-imal	0	1	2	3	4	5	6	7
	Hexadeci-mal									
0000	0		NUL	DLE	SP	0	@	P	‘	p
0001	1		SOH	DC1	!	1	A	Q	a	q
0010	2		STX	DC2	”	2	B	R	b	r
0011	3		ETX	DC3	#	3	C	S	c	s
0100	4		EOT	DC4	$	4	D	T	d	t
0101	5		ENQ	NAK	%	5	E	U	e	u
0110	6		ACK	SYN	&	6	F	V	f	v
0111	7		BEL	ETB	’	7	G	W	g	w
1000	8		BS	CAN	(	8	H	X	h	x
1001	9		HT	EN	)	9	I	Y	i	y
1010	A		LF	SUB	*	:	J	Z	j	z
1011	B		VT	ESC	+	;	K	[	k	{
1100	C		FF	FS	,	<	L	\	l	!
1101	D		CR	GS	-	=	M	]	m	}
1110	E		SO	RS	.	>	N	^	n	~
1111	F		SI	US	/	?	O	_	o	DEL

1.1.4 Basic Transmission Timing of Transmission Unit

One character basic transmission timing of AV131 is as shown below.
ER signal (Terminal ready signal) is set by the initial process when power is turned on, and can be reset simply by the emergency stop switch.

1) Character sending timing

When the request to send signal (RS) is output to the other interface side, the clear to send the signal (CS) will come back from the other side. Then, characters are automatically sent from AV131.
The CS signal is called “clear to send”, and if the other side is in a receiving mode, the characters are always output, especially if the other side has a hardware buffer of a certain degree.

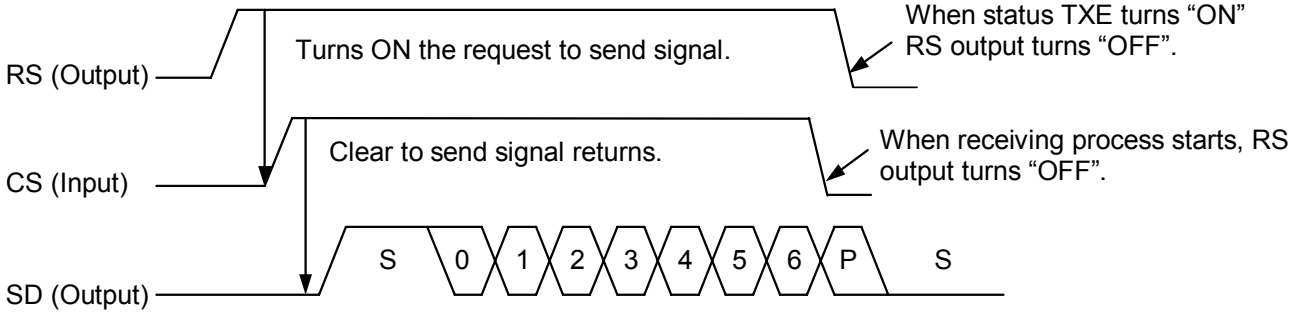

Since the DR (Data set ready) signal means the other interface terminal side is ready, it checks only if “ON” at the startup process of character sending. If DR signal is “OFF”, character sending waits until it is turned “ON”.

2) Character receiving timing

For receiving characters there are not restrictions or conditions in communications, so all characters output by the Host computer can be read. However, the characters received when processing the received command are neglected.

1.2. PanaProtocol and Command Specifications

D79HEC-51-020-A0

1.2.1 Message Format

The machine and the host computer are connected by RS-232C interface as hardware. And, as software, in byte unit, ASCII code (with parity) is used. The message format is as follows, and STX code to ETX code is processed as one message. It includes number of characters, command, data and check sum data.

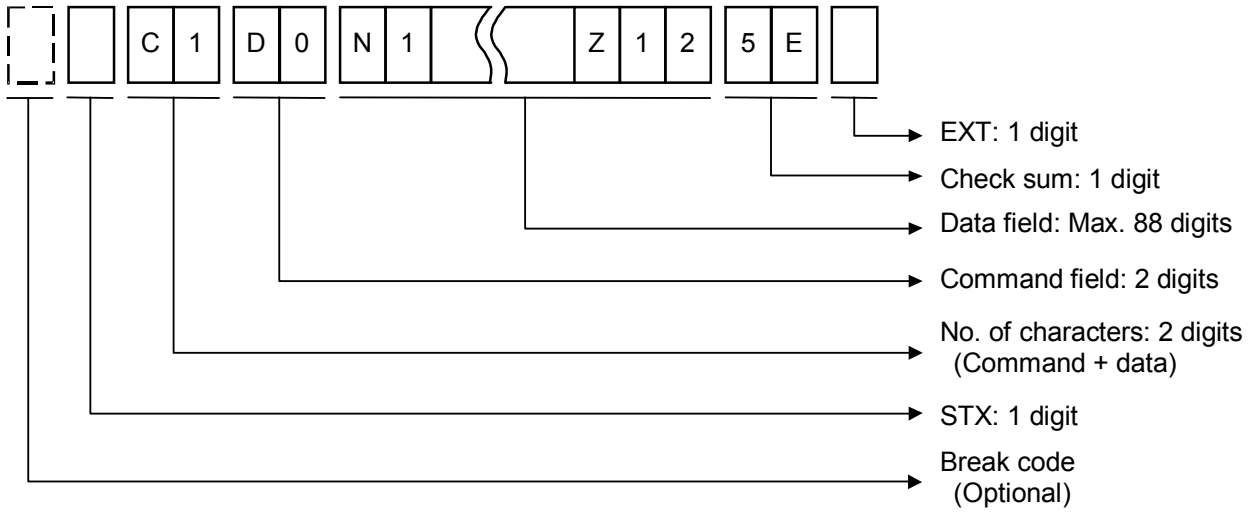

■ STX (START OF TEXT)

The character STX which appears first until the ETX which appears next are processed as one message. The STX which appears in the message again is processed only as one unit of data. The ASCII code with parity is H'82.

■ Number of characters

The number of characters in the command and data fields is counted in binary, and the result of 8 bits are divided into 4 bits each of upper and lower digits. They are respectively expressed in hexadecimals (X0” - F”) and processed by ASCII code.

Since hexadecimals are 2 digits, the largest number is FF (256). To read this much data, 256 codes for 256 buffers are required for the interface in the AV131.

In actual practice, however, 36 codes can meet requirements for all commands according to the command contents described later. As a result, the maximum number of codes to be received in one message by the machine is 96 characters including margin. However, even when characters other than those specified by commands are included in data, they are stored in the buffer when the machine receives the data. So be careful not to overflow the capacity when the label is added by the user.

In this case, attention must also be paid since characters other than those specified should also be counted.

■ Command field

The message between AV131 and the host computer is conducted by the specified command. The command is largely categorized as follows and is processed by ASCII code.

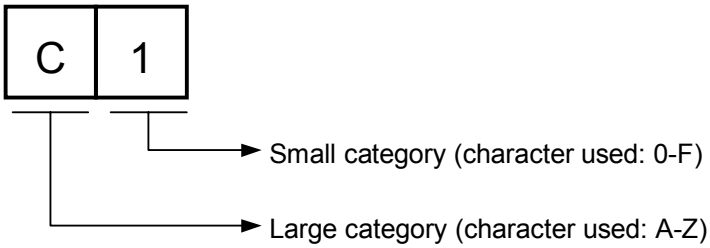

The large category is actually limited to the following 4 types and used as follows:

Large category command	Message	Contents	How it is used
A	Acknowledge	Used when AV131 and host computer mutually confirm that the message has been received. (Host CPU ← → AV131)	● Used as communication procedure, for use in “acknowledgment”, “negative acknowledgment” and “request to resend” to the message received.
C	Control command	Used when the host computer requests action to AV131. (Host CPU → AV131)	● Start of sending and receiving NC program. ● Specifies I/O monitoring. ● Start/stop/reset command for machine.
D	Data	Means the data transmitted between AV131 and host computer. (Host CPU ← → AV131)	● Transmits NC program. ● Transmits the results of I/O monitoring.
R	Real time information	Used for AV131 to inform host computer of changes in information whenever they occur. (Host CPU ← AV131)	● “Operation mode information”, “Error information” and “Recovery information” are transmitted from AV131 on real time to Host computer. The host computer compiles and analyzes this information and uses it for production management of AV131.

■ Data field

As explained above, the actual number range of data usable is 88 or less. In the data field, the characters other than those specified by command are neglected. Also, all are processed by ASCII code.

■ Check sum

The ASCII code, “number of characters”, “Command field” and “Data field” are subtracted by 8 bits not counting zero, and the results are divided into 4 bits each of upper and lower digits. They are respectively expressed in hexadecimals (X‘0’ - F”) and processed by ASCII code.
Therefore, at the time of confirmation of check sum, add command and data in ASCII code (7 bits, no parity) to check sum data. If the total of 8-bit sum becomes zero, the check sum is OK.
To figure out the character position of check sum, do not figure the 2-digit character before ETX. But, with the number of characters as the base, count the number of the data fields, and a 2-digit character after the contents of the count should coincide with the number of characters. Therefore, if there is an error in the number of characters, an error occurs in the check sum, too.

If the check sum is not necessary because of making the software for the host computer, leave the message format as it is and substitute a dummy data in the check sum column and then select changeover switch. All the check sums in the machine will all be OK.

■ ETX (END OF TEXT)

The ETX which appears at the end of the message is to complete the message which started with STX. In ASCII code with parity, it becomes X'03'.

■ Break (Optional)

When a conversation takes place between a machine and the host computer, several messages are exchanged between the two according to commands. A break code is used to start a conversation from a machine to the host computer, and is output to the host computer only once at the start of the conversation.

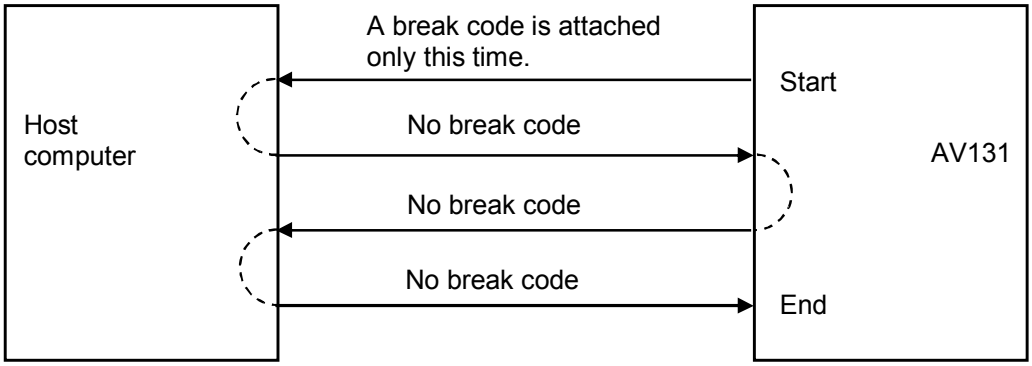

This is the code that SD terminal of the RS-232C interface is clamped forcefully to signal level "1" by 1.5-digit character, and this is usually used on the mini-computer to lead the data which is sent by breaking the current job.
When this is not necessary for the convenience of the host computer, select changeover switch of checksum function to cut the break. Never add this to the machine. This is not output in the standard settings.

1.3. Command Description

D79HEC-51-030-A0

Commands can be largely divided into the following 4 categories.

C command	Control command
D command	Data command
R command	Real time command
A command	Acknowledge command

1.3.1 C Commands (C0, C1, C2, C3, C4, C5)

There are 6 types of remote control commands to AV131, C0, C1, C2, C3, C4 and C5. These commands are all effective only from the host computer controlling AV131. C commands cannot be output from AV131 to the host computer.

1.3.2 A Commands (A0, A1, A2, A3, A4)

A (Acknowledge) command is a command when the host computer converses with AV131 to acknowledge that commands have been mutually received and that there are no errors. This command can be used both by the host computer and AV131.

■ Command to request the next data (A0)

This command shows that the receiver has properly received the data transmitted by the sender, and is usually used as a command requesting the next data during NC program data transmission.

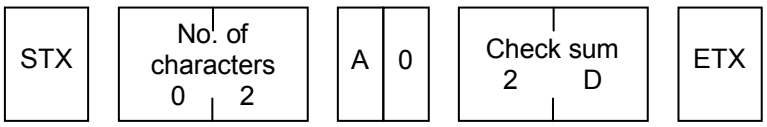

■ Data resend request command (A1)

If the data received is not normal, an A1 command is returned to the sender. When the sender receives the A1 command, it becomes data resending mode. Data resending is to send again the data which was in error. There are the following 6 types in data receiving error.

- Framing error
  Stop bit is not detected after data character.
- Overrun error
  The received data is sent within Z80 data buffer and the next data is received before the CPU can be read by Z80B.
- Parity error
  There is parity error (even parity check) in the data received.
- Check sum error
  The figure of the check sum code of the data column received is wrong.
- Overflow error
  Receiving buffer overflow has occurred.
- Format error
  No STX or No ETX in the data received.

From above contents, A command becomes the following configuration.

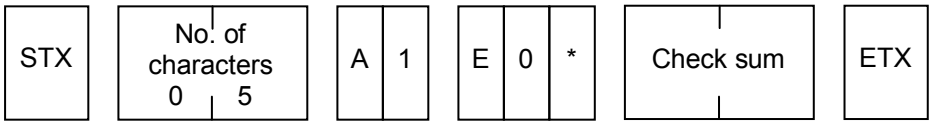

- ∗ Applicable code

0: Framing error	3: Check sum error
1: Overrun error	4: Overflow error
2: Parity error	5: Format error

Even if AV131 receives error codes E00 - E05, it has no means of expressing it, and does not process them. Therefore, when the host computer sends the A1 command to AV131, only A1 is sufficient, and there is no need to add E00 - E05. (It does not matter if they are added.)
However, from AV131 to host computer, E00 - E05 data is always added and sent. The host computer is then able to determine the type of error using that data.

The data resending sequence is as shown in Ex.) and this sequence is exactly the same of whatever data is being sent.

When AV131 operation thereafter is continued. If resending is not successful, try to prevent the host computer from sending the A1 command twice.
As a result, AV131 discontinues the receiving mode by time out processing, and prepares for the next conversation.
At the time of resending data, the reason the A1 command is not resent is that it is meaningless to resend it again.
When A1 command is returned at this time, AV131 becomes re-resending mode.
If an A1 command is returned from AV131, the host computer should control the number of A1 commands, and after resending data only once, discontinue resending.

Ex.) Data resending sequence

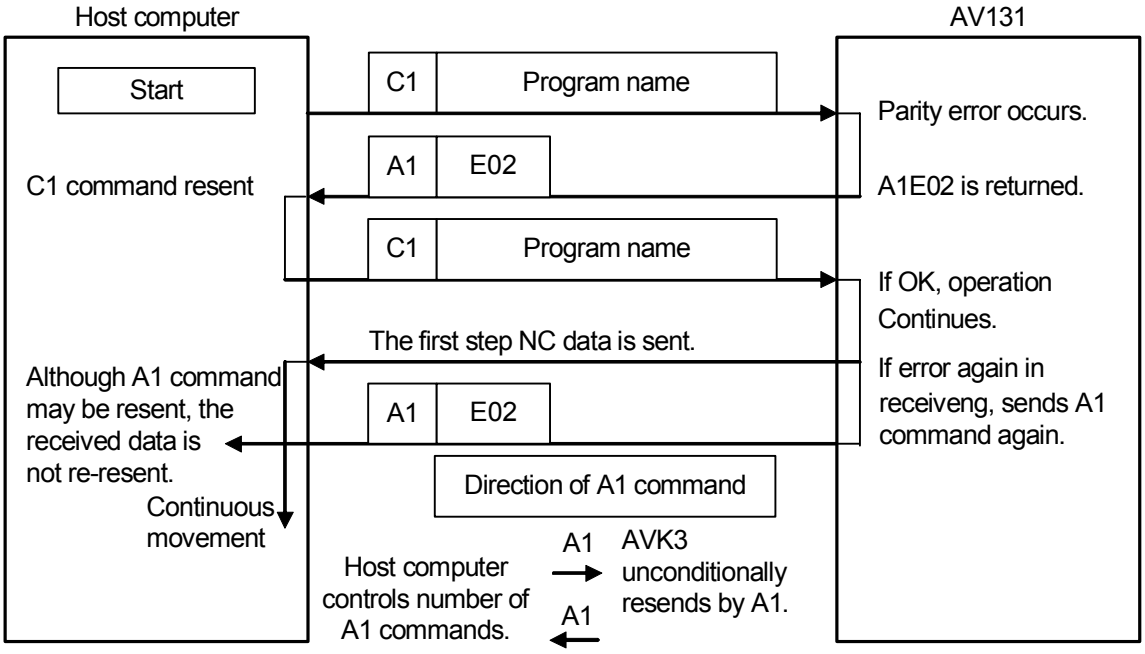

As shown in Data Resending Sequence, if A1 command is returned from AV131, the host computer side controls the number of A1 commands, and after resending data only once, discontinues resending.
As a result, in AV131, message sending mode is discontinued by time out processing.

■ Data transmission end command (A2)

This is the command showing that the conversation between the host computer and AV131 has been completed without any trouble. By this A2 command, AV131 discontinues the conversation mode.

■ No requested data command (A3)

Though C1 command is sent to AV131 requesting NC data to be sent, if the name of the program cannot be found, this command is used.

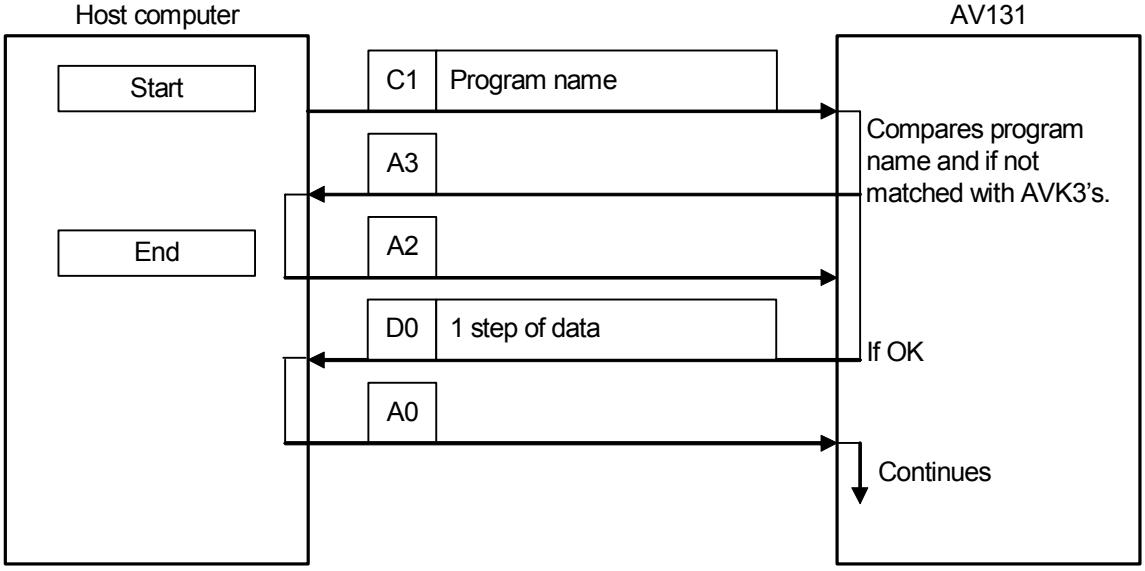

In the place of D command in the above figure, just by judging that there is no data for 1 step, do not use A3 command to say there is no data.

■ No received data command (A4)

This command is generated if any abnormality has occurred in sequence of command, or if AV131 has received commands when not in the condition to receive commands. In this case, AV131 invalidates the received data.
A4 command has the following 2 items.

- Operation error
  The machine has received C command in modes other than ONLINE.
  However, C2 command is effective in cases other than ONLINE. Besides, if there are abnormalities in command code, or command has been sent after time-out processing, this command is sent.
- Protocol error
  Another command has been received while sending data.

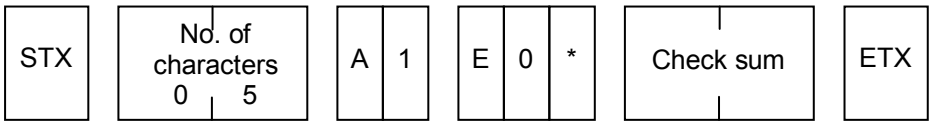

∗ Applicable code
0: Operation error 1: Protocol error

1.3.3 Data Command (D0)

Used at the time of sending data in the NC program transmission mode and in the monitoring mode.

=📖= For the data part format of D0 command, refer to ‘C0 command’, ‘C4 command’, and ‘C2 command’.

1.3.4 D Command (D1)

Used at the time of sending data in the inquiry and change mode (C3) of the program name, and the updated mode (C4) of the AV131 NC data.

=📖= For the data part format of D1 command, refer to ‘C3 command’ and ‘C4 command’.

2. DOWNLOADING PROGRAM

2.1. Downloading NC Data

D79HEC-52-010-A0

2.1.1 Downloading NC Data

From AV131, when the host computer sends C0 command to AV131, the AV131 goes into receiving mode, and as a result, can read the data (C0 command is used) sent to it.

■ データ詳細

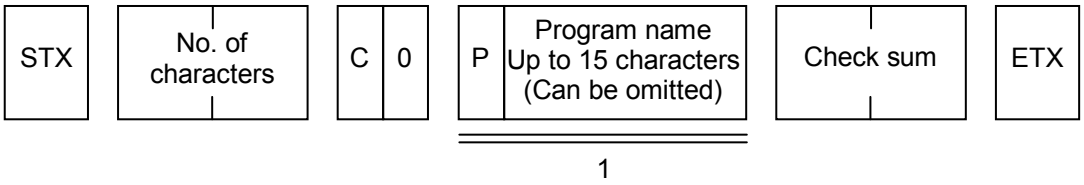

No.	Data name	Max. digits	Input range	Remarks
1	Program control No.	15	‘0’ to ‘9’ ‘A’ to ‘Z’ Special character	● Can be omitted. It is necessary to include the first character.

When the machine receives the C0 command, the A0 command is returned as acknowledgment.
The host computer receives this A0 command, and using D command (Data transfer command) sends leading step (one step) of NC data (N0001 or N1) to the AV131.

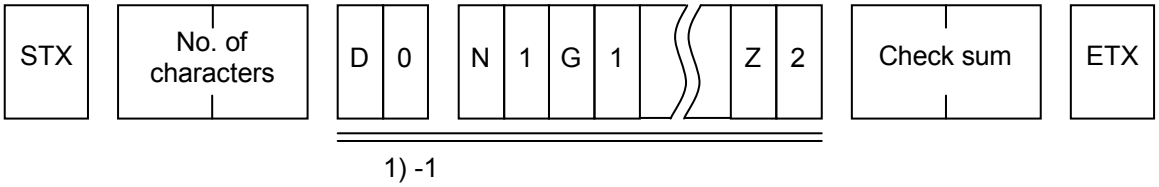

■ 1) – 1

D0N<u>nnnn</u> / <u>n</u>G<u>n</u>M<u>nnn</u>T<u>nnn</u>X <u>(±) nnnnnn</u>Y <u>(±) nnnnnn</u>Z<u>nnn</u>
1 2 3 4 5 6 7 8
V <u>(±) nnnnn</u>W <u>(±) nnnnn</u> ␣ C<u>********</u>
9 10 11

No.	Data name	Max. digits	Input range	Sup-press	Vari-able	Remarks
1	Program No.	4	0001 to 2000	×	○	● Stores in order of receipt irrespective of the step No.
2	Skip command	1	0 to 9	○	×	● /7 is unconditional skip.
3	Origin return command	1	0 to 3	○	×	● The step except for ‘0’ will be ignored.
4	Insert command	3	001 to 999	○	○	● Ignores M0T0. ● Data unable to convert will become M0 and error is returned. =📖= See conversion chart.
5	Correct and rotate command	3	001 to 999	○	○	● Ignores M0T0. ● Data unable to convert will become T0 and error is returned. =📖= See conversion chart.
6	X-coordinate	7	± 0 to ± 999999	○	○	● Max. digit includes ±.

No.	Data name	Max. digits	Input range	Sup-press	Vari-able	Remarks
7	Y-coordinate	7	± 0 to ± 999999	○	○	● Max. digit includes ±.
8	Z axis No.	3	0 to 121	○	○	● Z121 is a jumper.
9	V data	6	+ 0 to + 999999	○	○	● Not used
10	Insertion pitch data	6	+ 0 to + 999999	○	○	● ± is for matching format. Usually only + direction. ● Max. digit includes ±.
11	Circuit No.	8	'0' to '9' 'A' to 'Z'	○	×	● Be sure to make the digits fixed. ● Fill with space if not necessary.

=REMARKS=

- If exceeding the max. digit number, the data of the max. digits from the head becomes valid.
- S & R data continues M90X at the beginning. If it appears on the way, it will cause an error.
- If '∗' character is found in one message, it becomes EOP.
- If a character cannot be judged, the following numeric values will also be ignored.
- If a space appears, the characters thereafter will be ignored excluding the circuit Nos.

■ Protocol

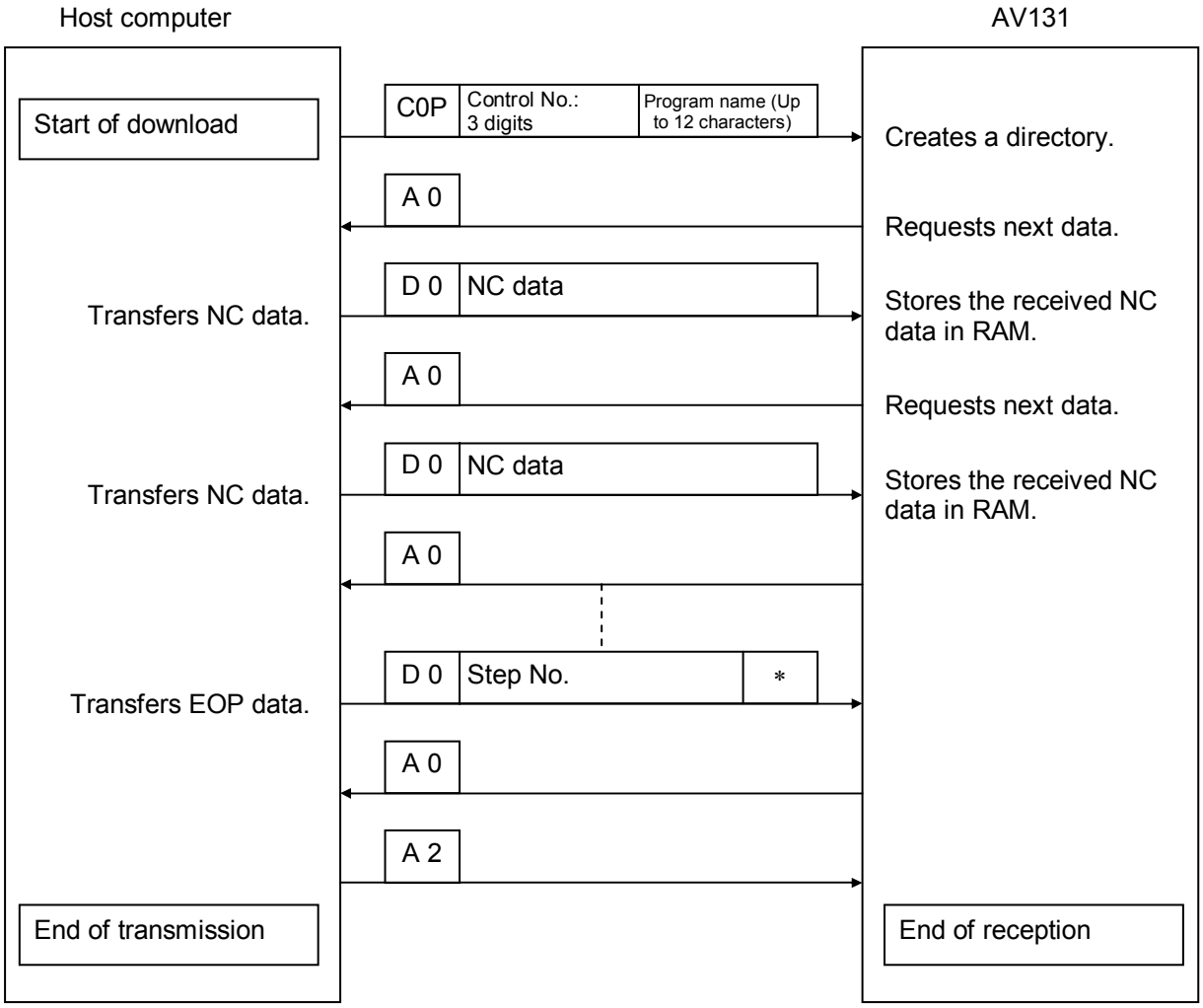

■ Condition

- Can be used in standard specification.
- Valid in ONLINE mode only.
- The data becomes valid when EOP (∗) is received and the processing normally ends down to A2.
  (If the processing ends abnormally in downloading, the data will be cleared.)
- If the same program as the one in the memory is specified and the processing ends abnormally, the program in the memory is deleted.
- If the download is executed with exceeding the remaining steps or exceeding the stored program numbers, sends ‘A4E00’ to end the processing.
- If invalid M or T commands are sent, they will be M0 and T0. The step ‘M0T0’ is skipped.
  (When only one of the pair is 0, ‘A4E00’ is returned.)
- Origin return step is skipped. (When the program is uploaded, the step is added to output.)
- If the program currently being executed is downloaded during operation, ‘A4E00’ is returned.

2.2. Downloading Parts Data

D79HEC-52-100-A0

2.2.1 Downloading Parts Data

From AV131, when the host computer sends C0 command to AV131, the AV131 goes into receiving mode, and as a result, can read the data (C0 command is used) sent to it.

■ Data details

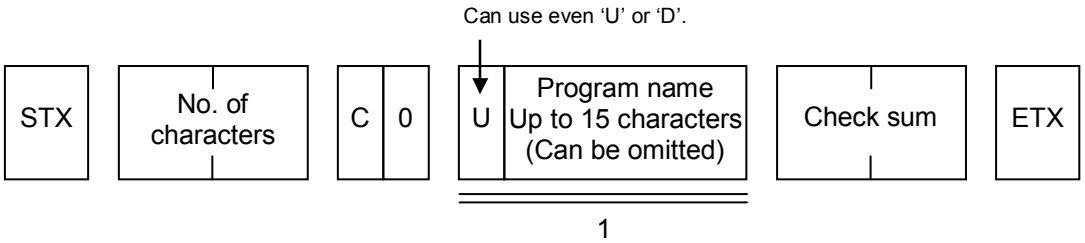

No.	Data name	Max. digits	Input range	Remarks
1	Program control No.	15	'0' to '9' 'A' to 'Z' Special character	● Can be omitted. It is necessary to include the first character.

When the machine receives the C0 command, the A0 command is returned as acknowledgment.
The host computer receives this A0 command, and using D command (Data transfer command) sends leading step (one step) of NC data (N0001or N1) to the AV131.

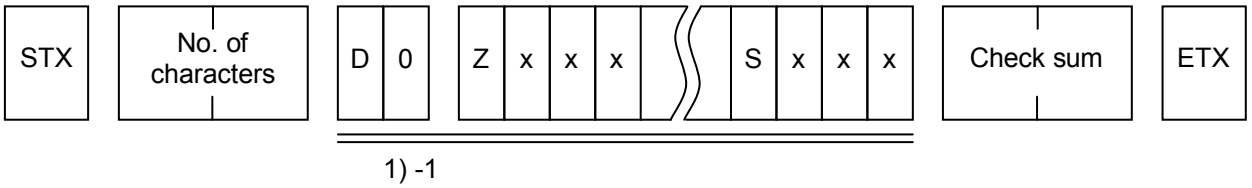

■ 1) –1

D0Z<u>nnn</u>P<u>∗ ~ ∗</u>B<u>nnn</u>L<u>nnn</u>C<u>n</u>S<u>nnn</u>
1 2 3 4 5 6

No.	Data name	Max. digits	Input range	Sup-press	Vari-able	Remarks
1	Z axis No.	3	001 to 121	×	○	● Stores data into the designated parts data. ● If not in input range, it becomes an error.
2	Parts name	16	'0' to '9' 'A' to 'Z'	×	×	● Be sure to make the digits fixed. ● Fill with space if not necessary.
3	Part thickness	3	000 to 999	○	○	● 1 / 100 mm increments
4	Lead wire diameter	3	000 to 999	○	○	● 1 / 100 mm increments
5	Chuck switching	1	0 to 3	○	×	● 0 = 26 mm, 1 = 52 mm 2 = 26 mm + centering 3 = 52 mm + centering
6	Spare feeder	3	000 to 120	×	○	● It shall be made 0 unconditionally, if Z axis No. is Z121.

=REMARKS=

- Possible of sending the optional feeder only.
- If exceeding the max. digit number, the data of the max. digits from the head becomes valid.
- If '∗' character is found in one message, it becomes EOP.
- If a character cannot be judged, the following numeric values will also be ignored.

■ Protocol

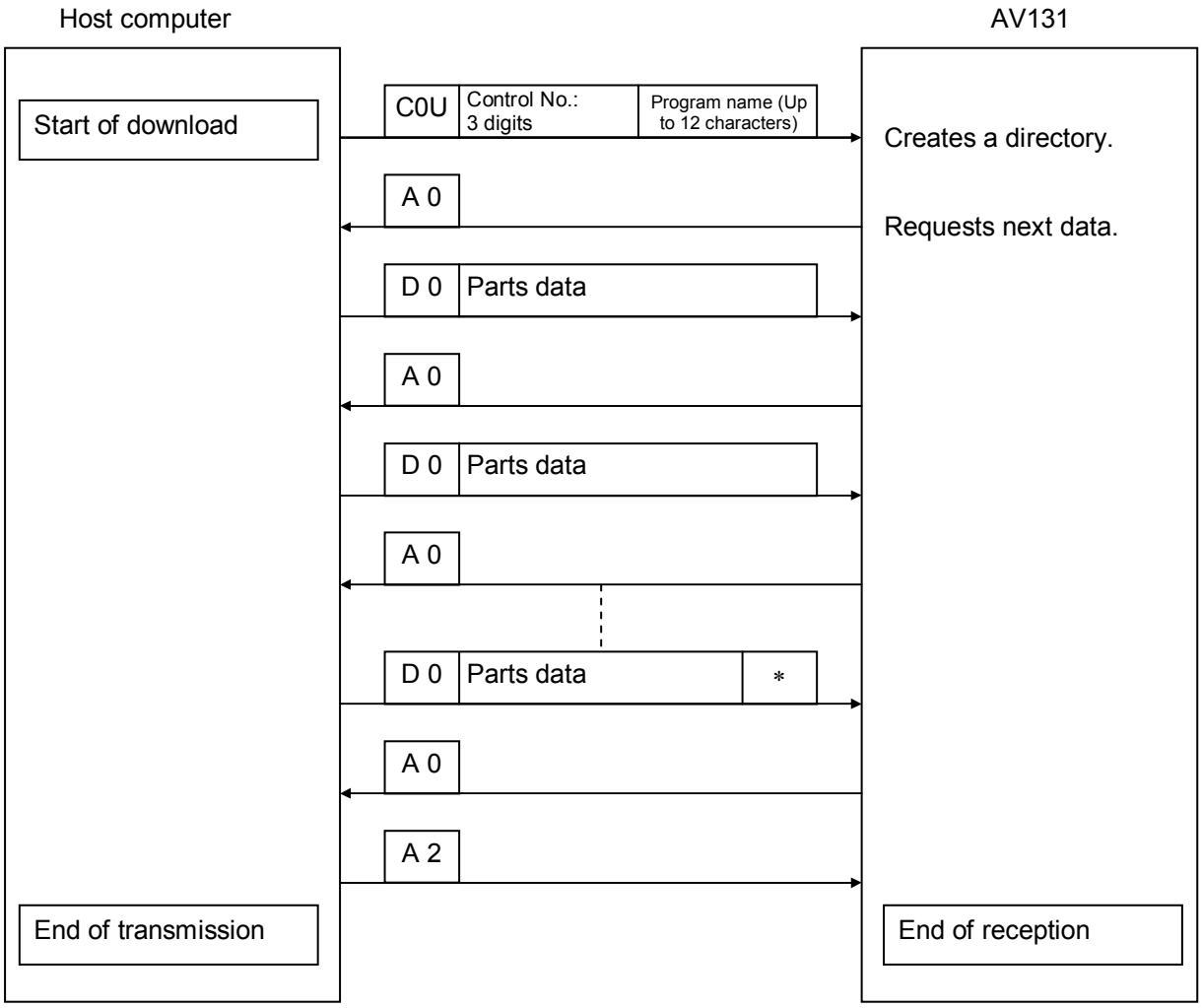

■ Condition

- Can be used in standard specification.
- Valid in ONLINE mode only.
- The data becomes valid when EOP (∗) is received and the processing normally ends down to A2. (If the processing ends abnormally in downloading, the data will be cleared.)
- If the same program as the one in the memory is specified and the processing ends abnormally, the program in the memory is deleted.
- If the download is executed with exceeding the remaining steps or exceeding the stored program numbers, sends 'A4E00' to end the processing.
- If the program currently being executed is downloaded during operation, 'A4E00' is returned.
- If D0 is sent after receiving EOP, 'A4E01' is returned.

2.3. Downloading P.C.B. Data

D79HEC-52-120-A0

2.3.1 Downloading P.C.B. Data

■ Data details

■ 1) – 1

C0C∗ ~ ∗
1

No.	Data name	Max. digits	Input range	Sup-press	Vari-able	Remarks
1	Program name	15	'0' to '9' 'A' to 'Z' Special character	×	○	● If other than the valid character, A4E01 is returned.

■ 1) – 2

D0Xnnnnnn Ynnnnnn Hnnnnnn
1 2 3

No.	Data name	Max. digits	Input range	Sup-press	Vari-able	Remarks
1	PCB dimension X	6	0 to 999999	○	○	● Only + direction ● μm
2	PCB dimension Y	6	0 to 999999	○	○	● Only + direction ● μm
3	Reference hole pitch	6	0 to 999999	○	○	● Only + direction ● μm

=REMARKS=

- If the data is omitted, the last data remains.
- If exceeding the max. digit number, the data of the max. digits from the end becomes valid.
- If a character cannot be identified, the following numeric values will also be ignored.

■ Protocol

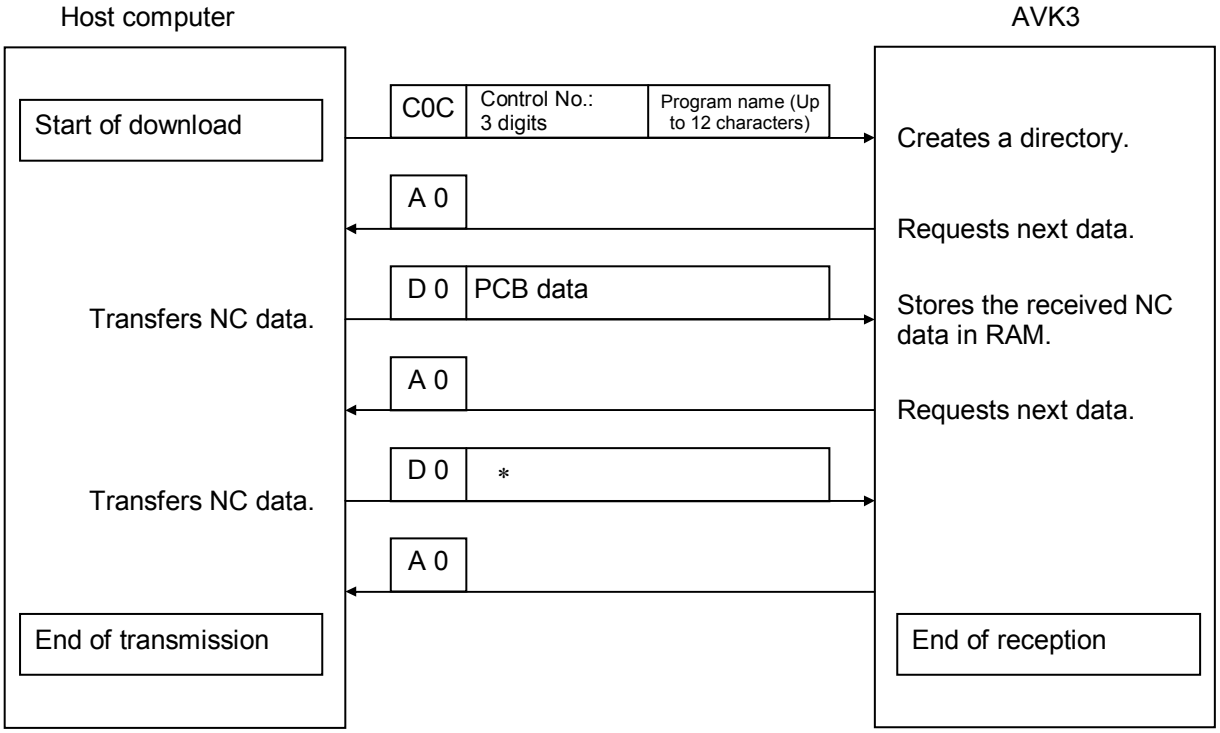

■ Condition

- Automatic width control can be used validly.
- Valid in ONLINE mode only.
- The data becomes valid when EOP (∗) is received and the processing normally ends down to A2. (If the processing ends abnormally in downloading, the data will be cleared.)
- If the same program as the one in the memory is specified and the processing ends abnormally, the program in the memory is deleted.
- If the program currently being executed is downloaded during operation, ‘A4E00’ is returned.

2.4. Downloading Program Offset

D79HEC-52-180-A0

2.4.1 Downloading Program Offset

From AV131, when the host computer sends C0 command to AV131, the AV131 goes into receiving mode, and as a result, can read the data (C0 command is used) sent to it.

■ Data details

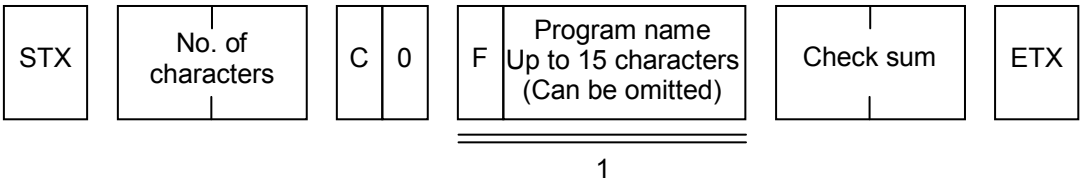

No.	Data name	Max. digits	Input range	Sup-press	Vari-able	Remarks
1	Program control No.	15	'0' to '9' 'A' to 'Z' Special character	○	○	● Can be omitted. (Excluding the first character)

When the machine receives the C0 command, the A0 command is returned as acknowledgment. The host computer receives this A0 command, and using D command (Data transfer command) sends leading step (one step) of program offset data to the AV131.

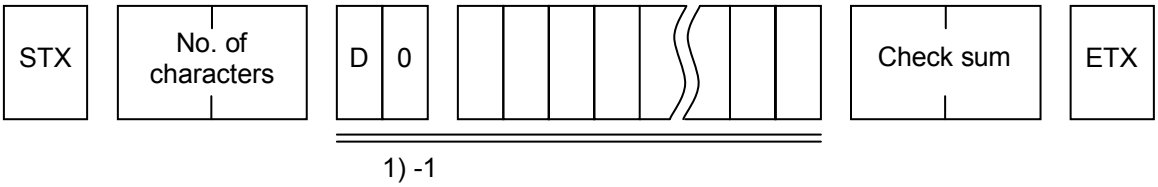

■ 1) - 1

D0F$\underbrace{*\sim*}_{1}$

No.	Data name	Max. digits	Input range	Sup-press	Vari-able	Remarks
1	Program name	15	'0' to '9' 'A' to 'Z' Special character	×	○	● If other than the valid characters within 15 digits, it becomes an error.

■ 1) - 2

D0X (±) nnnnnnY (±) nnnnnnFnnnAnB (±) nnnnnnC (±) nnnnnn
1 2 3 4 5 6
DnnnEnnnGnH (±) nnnnnnI (±) nnnnnnJnnnKnnn
7 8 9 10 11 12 13

No.	Data name	Max. digits	Input range	Sup-press	Vari-able	Remarks
1	X program offset	7	-999999 to +999999	○	○	● Max. digit includes ±.
2	Y program offset	7	-999999 to +999999	○	○	● Max. digit includes ±.
3	Multiple origin offset	3	0 to 120	○	○	● Multi origin
4	Reference hole 1 data	1	0 to 1	○	×	● 0 = Invalid, 1 = Valid
5	Reference hole 1 X coordinate	7	-999999 to +999999	○	○	● Max. digit includes ±.
6	Reference hole 1 Y coordinate	7	-999999 to +999999	○	○	● Max. digit includes ±.
7	Reference hole 1 window size X	3	0 to 511	○	○	● Window size X
8	Reference hole 1 window size Y	3	0 to 479	○	○	● Window size Y
9	Reference hole 2 data	1	0 to 1	○	○	● 0 = Invalid, 1 = Valid
10	Reference hole 2 X coordinate	7	-999999 to +999999	○	○	● Max. digit includes ±.
11	Reference hole 2 Y coordinate	7	-999999 to +999999	○	○	● Max. digit includes ±.
12	Reference hole 2 window size X	3	0 to 511	○	○	● Window size X
13	Reference hole 2 window size Y	3	0 to 479	○	○	● Window size Y

=REMARKS=

- When the data is omitted, the last data remains.
- If the digit is over the maximum, the data for the first max. digits from the end will be valid.
- If '∗' character appears in one message, it becomes EOP.
- If the machine cannot identify the character, the following numeric values will also be ignored.

■ Protocol

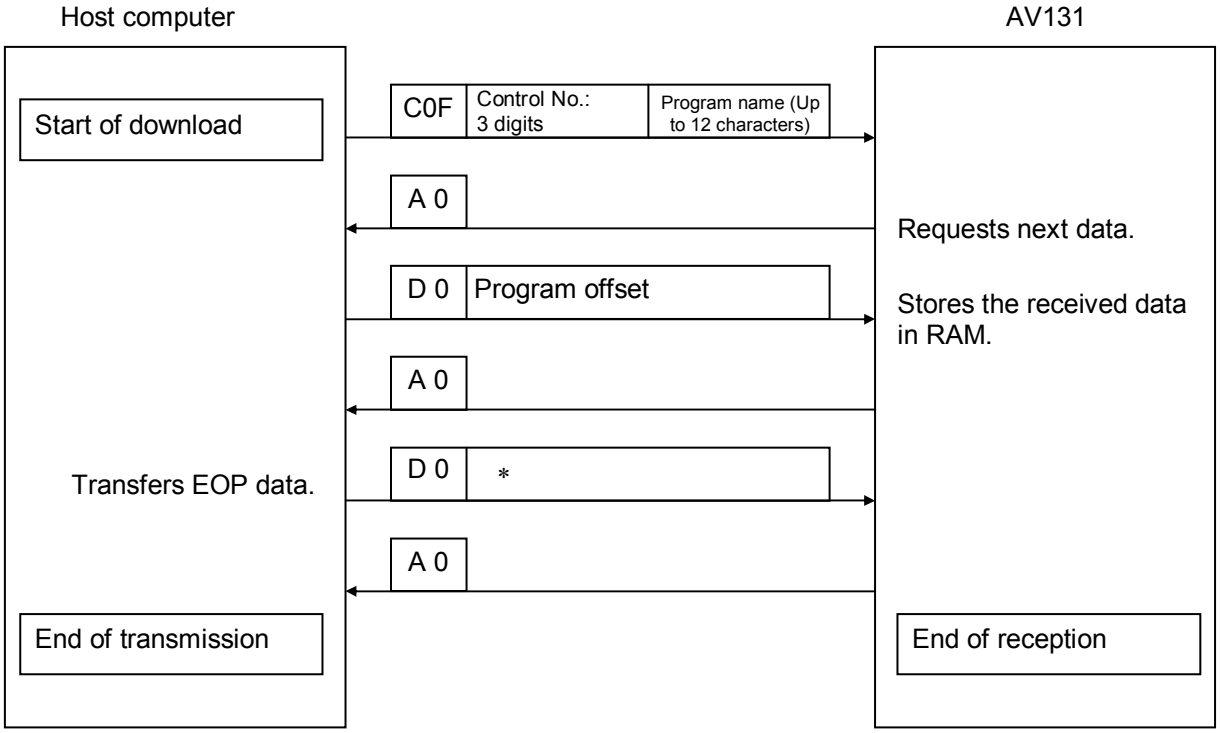

■ Condition

- Can be used in standard specification.
- Valid in ONLINE mode only.
- If a program which does not exist in the memory is specified, ‘A4E00’ is returned.
- Program offset data can be sent repeatedly until EOP code is sent.
  The latest program offset data is valid.
- If the program is downloaded during operation, ‘A4E00’ is returned.

3. UPLOADING PROGRAMS

3.1. Uploading NC Data

D79HEC-53-010-A0

3.1.1 Uploading NC Data

With AV131, if host computer gives C1 command to AV131, the AV131 becomes the receiving mode of the internal NC data and then can send leading step (one step) of NC data to AV131.

■ Data details

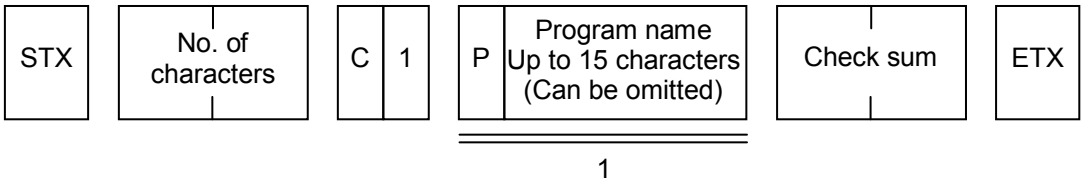

No.	Data name	Max. digits	Input range	Sup-press	Vari-able	Remarks
1	Program control No.	15	'0' to '9' 'A' to 'Z' Special character	○	○	● Can be omitted. (Excluding the first character)

The program name given by the host computer and the name in the machine are compared. If the two names as matched, NC program data is returned.

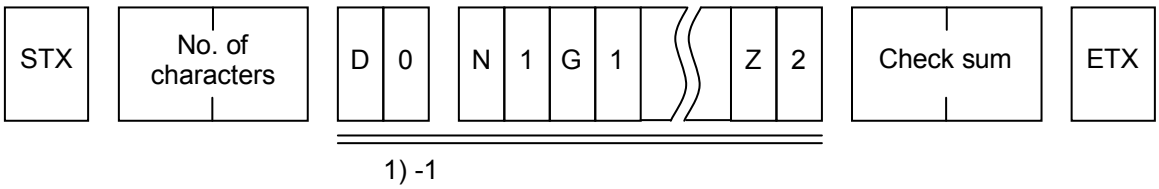

■ 1) -1

D0Nnnnn / nGnMnnnTnnnX (±)nnnnnnnY (±)nnnnnn
1 2 3 4 5 6 7

ZnnnV(±)nnnnn W (±)nnnnn ␣ C********
8 9 10 11

No.	Data name	Max. digits	Output range	Sup-press	Vari-able	Remarks
1	Step No.	4	0001 to 2003	×	○	● Adding the origin return step, the last M0T0 step and EOP has caused three steps over.
2	Skip command	1	0 to 9	○	○	
3	Origin return command	1	0 to 1	○	○	● The origin return step is added for compatibility with former machines.
4	Insert command	3	001 to 999	○	○	● =📖= See the conversion chart for details.
5	Correct and rotate	3	001 to 999	○	○	● =📖= See the conversion chart for details.
6	X coordinate	7	±0 to ±999999	○	○	● Max. digit includes ±. ● 1 / 100 mm
7	Y coordinate	7	±0 to ±999999	○	○	● Max. digit includes ±. ● 1 / 100 mm
8	Z axis No.	3	0 to 121	○	○	● Z121 is a jumper.
9	V data	6	0 to 999999	○	○	● Not used

No.	Data name	Max. digits	Output range	Sup-press	Vari-able	Remarks
10	Insertion pitch data	6	0 to 999999	○	○	● ± is for matching format. Usually only + direction. ● Max. digit includes ±. ● 1 / 100mm
11	Circuit No.	8	'0' to '9' 'A' to 'Z'	○	○	● Fill with space if the digits are not filled (8).

■ Protocol

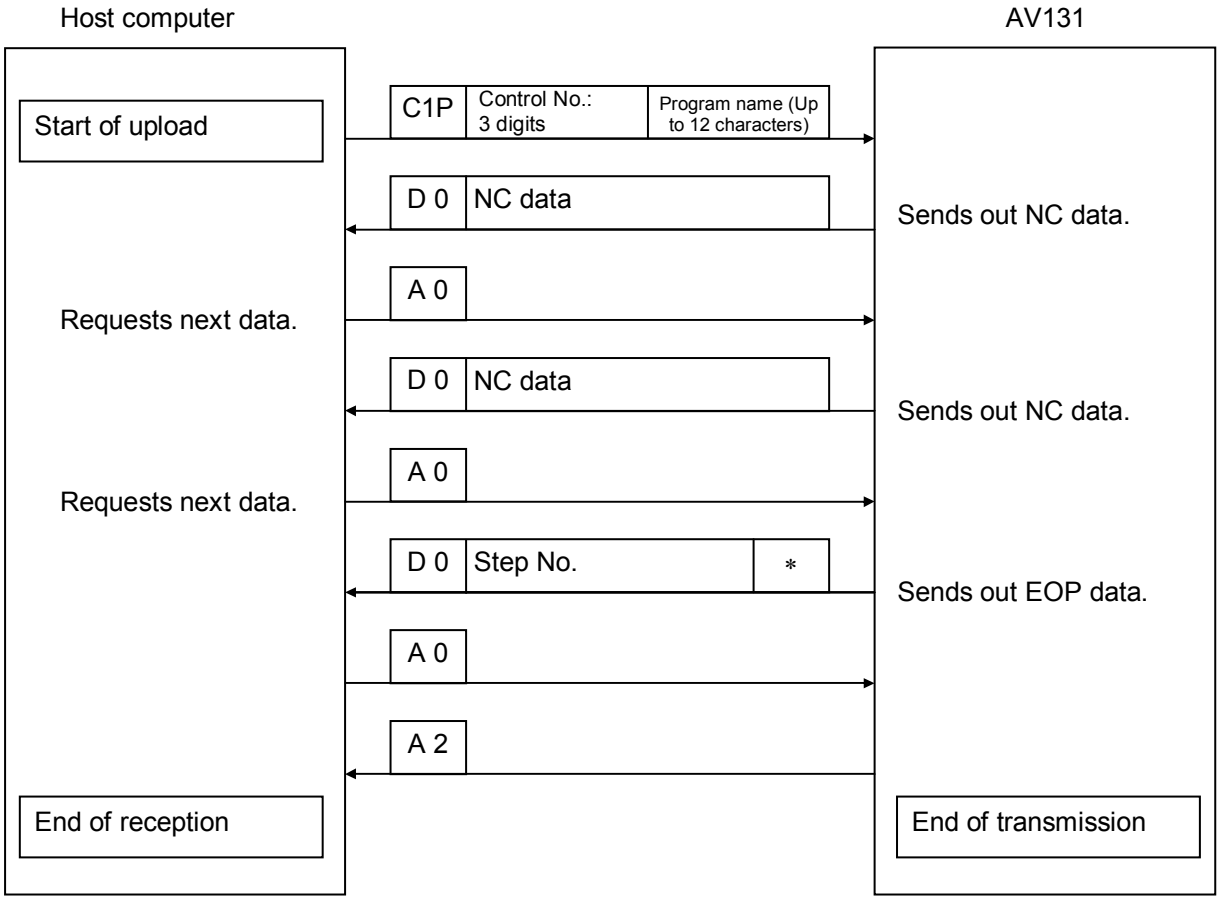

■ Condition

- Can be used in standard specification.
- Valid in ONLINE mode only.
- If a program which does not exist in the memory is specified, 'A4E00' is returned.
- Origin return step (GIT4 data) and final M0T0 step are added to output.
- After receiving 'A2' from HOST, the processing ends.

3.2. Uploading Parts Data

D79HEC-53-110-A0

3.2.1 Uploading Parts Data

With AV131, if host computer gives C1 command to AV131, the AV131 becomes the receiving mode of the internal parts data and then can send leading step (one step) of parts data to AV131.

■ Data details

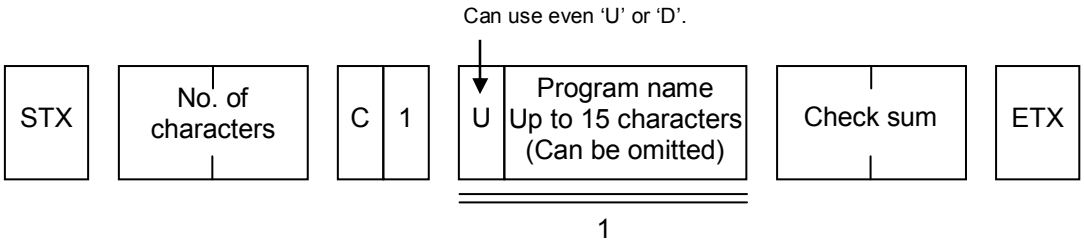

No.	Data name	Max. digits	Input range	Sup-press	Vari-able	Remarks
1	Program control No.	15	'0' to '9' 'A' to 'Z' Special character	○	○	● Can be omitted. (Excluding the first character)

The program name given by the host computer and the name in the machine are compared. If the two names as matched, parts data is returned.

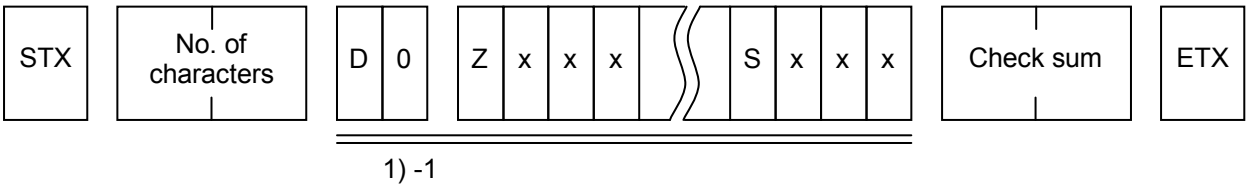

■ 1) -1

D0Znnn P∗ ~ ∗Bnnn Lnnn Cn Snnn
1 2 3 4 5 6

No.	Data name	Max. digits	Output range	Sup-press	Vari-able	Remarks
1	Z axis No.	4	001 to 122	×	○	● Z122 is to be allotted to EOP step. ● Data is up to Z121.
2	Parts name	16	'0' to '9' 'A' to 'Z'	×	○	● If NULL, 16 blank spaces are output.
3	Part thickness	3	000 to 999	×	○	● 1 / 100 mm increments
4	Lead wire diameter	3	000 to 999	×	○	● 1 / 100 mm increments
5	Chuck switching	1	0 to 3	×	○	● 0 = 26 mm, 1 = 52 mm, 2 = 26 mm + centering, 3 = 52 mm + centering
6	Spare feeder	3	000 to 120	×	○	● Output range is up to Z120 since Z121 is allotted to jumper.

■ Protocol

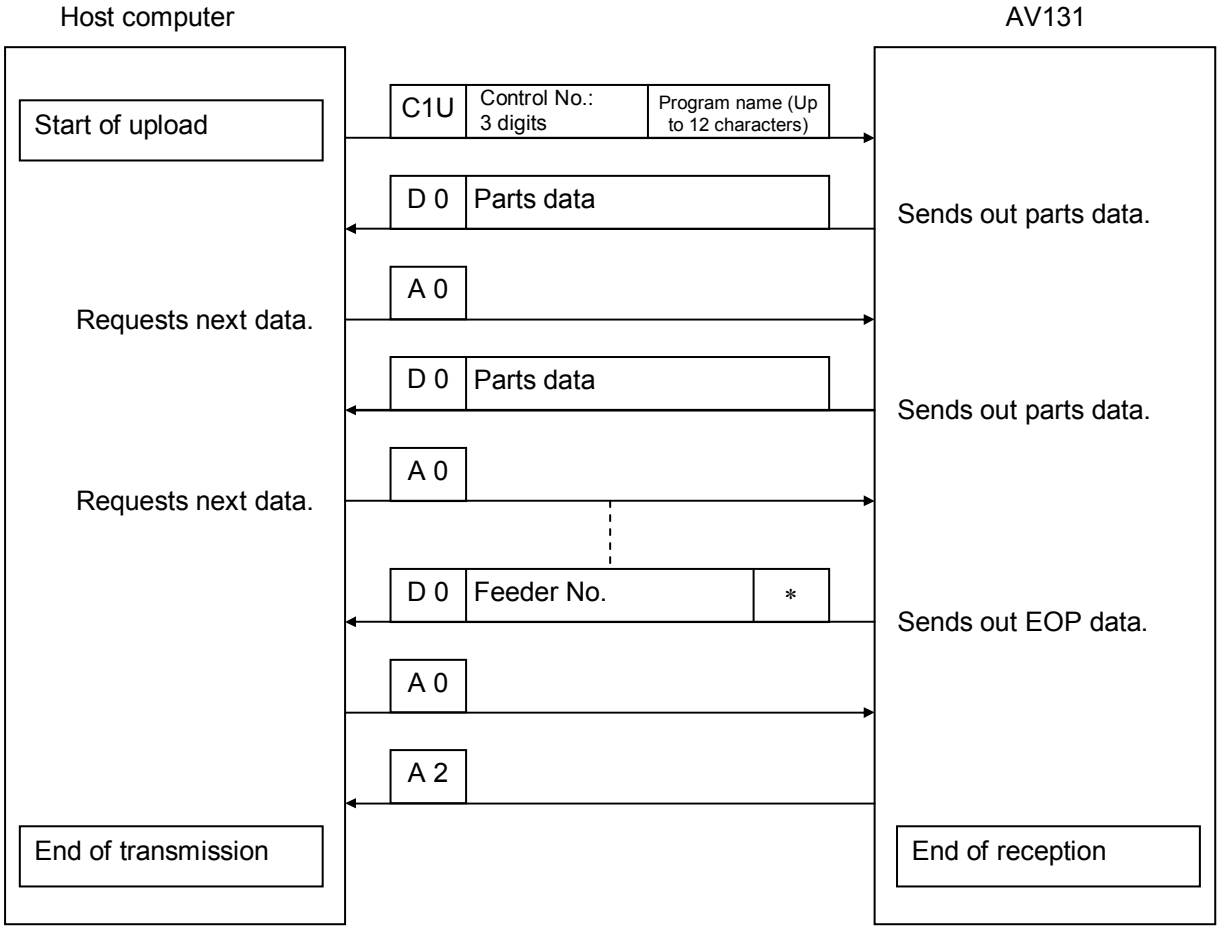

■ Condition

- Can be used in standard specification.
- Valid in ONLINE mode only.
- If a program which does not exist in the memory is specified, ‘A4E00’ is returned.
- After receiving ‘A2’ from HOST, the processing ends.

3.3. Uploading P.C.B. Data

D79HEC-53-120-A0

3.3.1 Uploading P.C.B. Data

■ Data details

■ 1) -1

C1C∗ ~ ∗
1

No.	Data name	Max. digits	Input range	Sup-press	Vari-able	Remarks
1	Program name	15	‘0’ to ‘9’ ‘A’ to ‘Z’ Special character	×	○	● If other than the valid character, ‘A4E01’ is returned. ● If the name does not exist in the memory, ‘A3’ is returned.

■ 1) -2

D0Xnnnnnn Ynnnnnn Hnnnnnn
1 2 3

No.	Data name	Max. digits	Input range	Sup-press	Vari-able	Remarks
1	PCB dimension X	6	0 to 999999	×	○	● Only + direction ● μm
2	PCB dimension Y	6	0 to 999999	×	○	● Only + direction ● μm
3	Reference hole pitch	6	0 to 999999	×	○	● Only + direction ● μm

■ Protocol

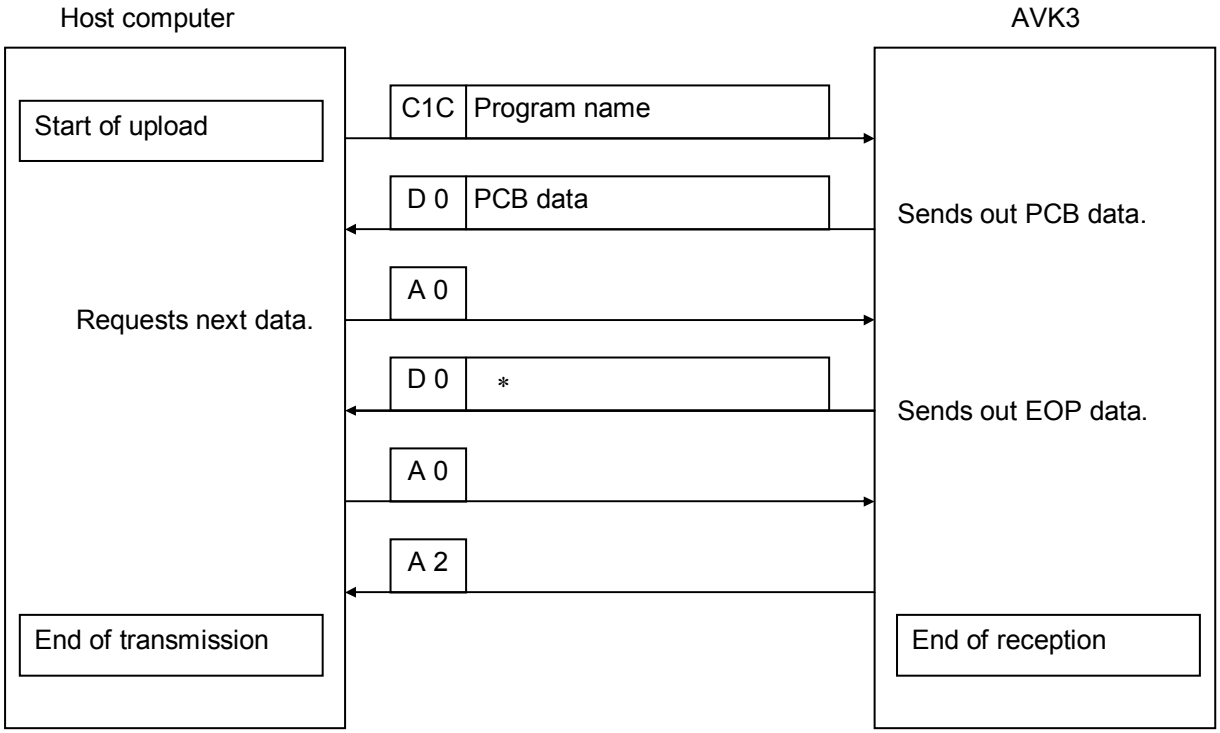

■ Condition

- Valid in ONLINE mode only.
- If a program which does not exist in the memory is specified, ‘A3’ is returned.
- After receiving ‘A2’ from HOST, the processing ends.

3.4. Uploading Program Offset

D79HEC-53-180-A0

3.4.1 Uploading Program Offset

With AV131, if host computer gives C1 command to AV131, the AV131 becomes the receiving mode of the internal program offset and then can send leading step (one step) of program offset to AV131.

■ Data details

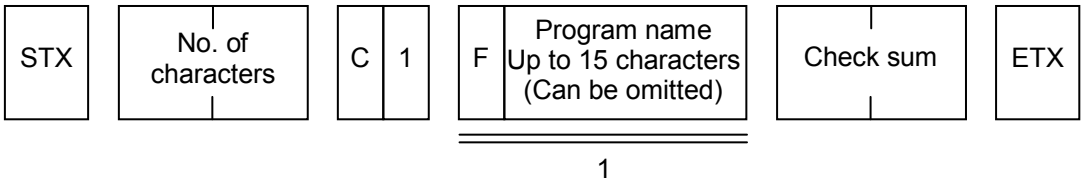

No.	Data name	Max. digits	Input range	Omit	Fix	Remarks
1	Program control No.	15	‘0’ to ‘9’ ‘A’ to ‘Z’ Special character	○	○	● Can be omitted. (Excluding the first character)

The program name given by the host computer and the name in the machine are compared. If the two names as matched, program offset is returned.

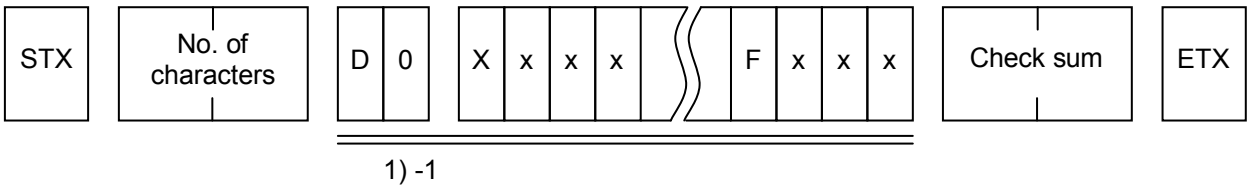

■ 1) -1

D0X(±)nnnnnnY(±)nnnnnnFnnnAnB(±)nnnnnnC(±)nnnnnn
1 2 3 4 5 6
DnnnEnnnGnH(±)nnnnnnI(±)nnnnnnJnnnKnnn
7 8 9 10 11 12 13

No.	Data name	Max. digits	Input range	Sup-press	Fix	Remarks
1	X program offset	7	-999999 to +999999	×	○	● Max. digit includes ±. ● 1 /100 mm
2	Y program offset	7	-999999 to +999999	×	○	● Max. digit includes ±. ● 1 /100 mm
3	Multiple origin offset	3	0 to 120	×	○	● Multiple origin
4	Reference hole 1 data	1	0 to 1	×	○	● 0 = Invalid, 1 = Valid
5	Reference hole 1 X coordinate	7	-999999 to +999999	×	○	● Max. digit includes ±. ● 1 /100 mm
6	Reference hole 1 Y coordinate	7	-999999 to +999999	×	○	● Max. digit includes ±. ● 1 /100 mm
7	Reference hole 1 window size X	3	0 to 511	×	○	● Window size X ● pix

No.	Data name	Max. digits	Input range	Sup-press	Fix	Remarks
8	Reference hole 1 window size Y	3	0 to 479	×	○	● Window size Y ● pix
9	Reference hole 2 data	1	0 to 1	×	○	● 0 = Invalid, 1 = Valid
10	Reference hole 2 X coordinate	7	-999999 to +999999	×	○	● Max. digit includes ±. ● 1 /100 mm
11	Reference hole 2 Y coordinate	7	-999999 to +999999	×	○	● Max. digit includes ±. ● 1 /100 mm
12	Reference hole 2 window size X	3	0 to 511	×	○	● Window size X ● pix
13	Reference hole 2 window size Y	3	0 to 479	×	○	● Window size Y ● pix

■ Protocol

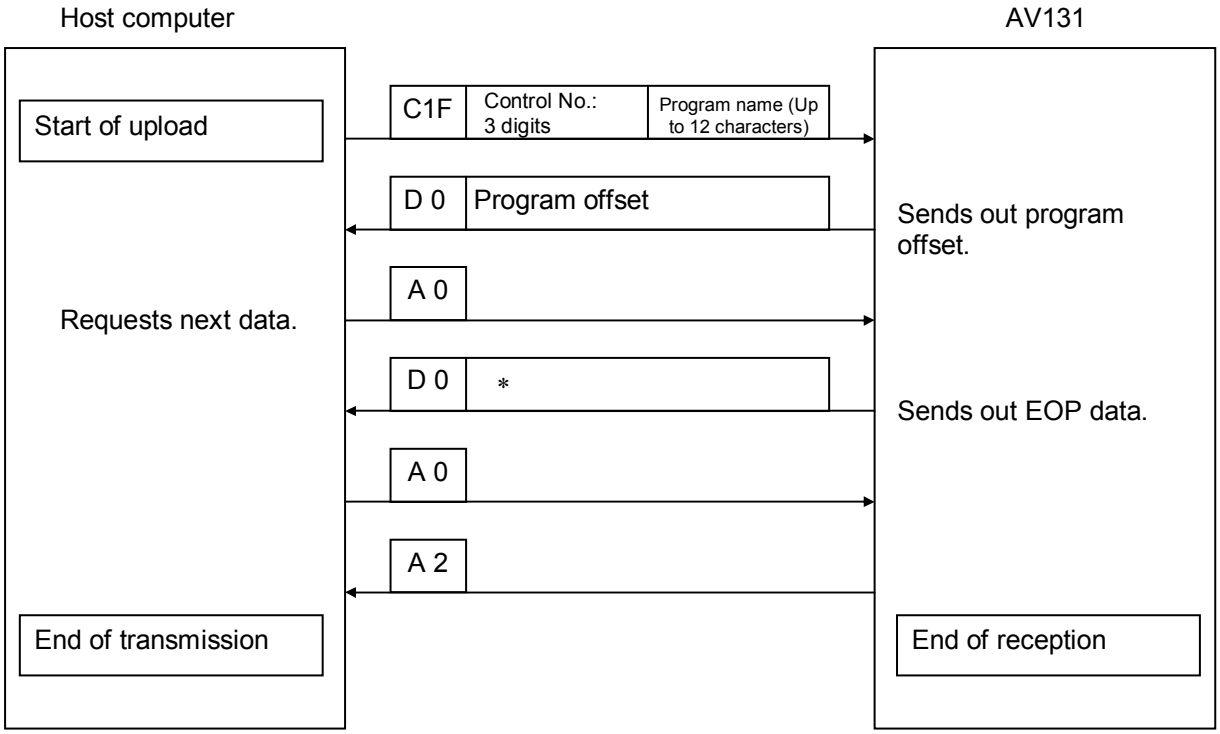

■ Condition

- Can be used in standard specification.
- Valid in ONLINE mode only.
- If a program which does not exist in the memory is specified, ‘A4E00’ is returned.
- After receiving ‘A2’ from HOST, the processing ends.

3.5. Uploading Production Information (Machine)

D79HEC-53-130-A0

3.5.1 Uploading Production Information (Machine)

With AV131, if host computer gives C1 command to AV131, the AV131 becomes the receiving mode of the internal parts set number data and then can read the production information (machine) (using C1 command) sent to the AV131.

■ Data details

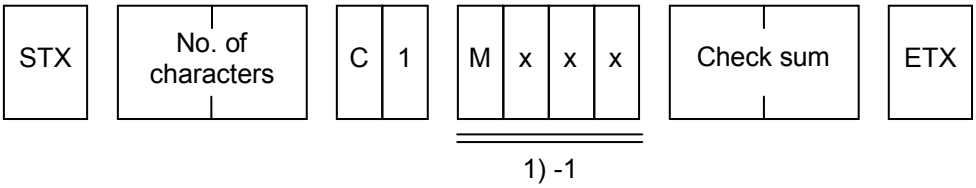

■ 1) -1

C1M<u>nnn</u>P<u>∗ ~ ∗</u>
1 2

No.	Data name	Max. digits	Input range	Sup-press	Variable	Remarks
1	Total designation	3	000 to 900	×	○	● =000: Sub-total (no clear after upload) ● =900: Grand total (clear after upload) (≠900 is sub-total) ● If program name is designated, 3 digits become fixed.
2	Program name	16	‘0’ to ‘9’ ‘A’ to ‘Z’ Special character	○	○	● If other than the valid character, ‘A4E01’ is returned. ● If the name does not exist in the memory, ‘A3’ is returned.

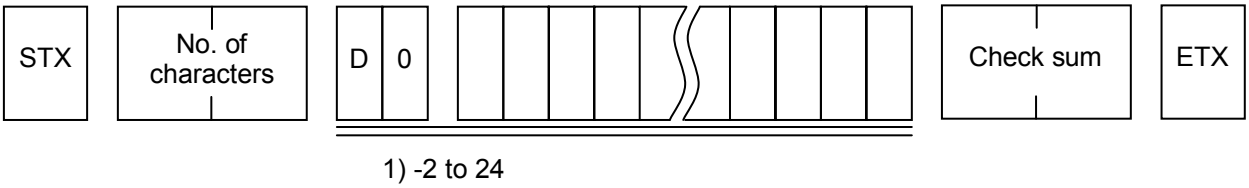

■ 1) -2

D0<u>SD</u><u>nnnn</u> / <u>nn</u> / <u>nn</u> ␣␣ <u>nn</u> : <u>nn</u>
1 2 3 4 5 6

No.	Data name	Max. digits	Input range	Sup-press	Fix	Remarks
1	Collection start date	2		×	○	● Output command for the production information collection start date
2	Year (AD)	4	1991 to 2nnn	×	○	● Corresponding to AD 2000
3	Month	2	01 to 12	×	○	
4	Date	2	01 to 31	×	○	
5	Hour	2	00 to 23	×	○	
6	Minute	2	00 to 59	×	○	

■ 1) -3

D0EDnnnn / nn / nn ␣␣ nn : nn
1 2 3 4 5 6

No.	Data name	Max. digits	Input range	Sup-press	Fix	Remarks
1	Collection end date	2		×	○	● Output command for the production information collection end date
2	Year (AD)	4	1991 to 2nnn	×	○	● Corresponding to AD 2000
3	Month	2	01 to 12	×	○	
4	Date	2	01 to 31	×	○	
5	Time	2	00 to 23	×	○	
6	Minute	2	00 to 59	×	○	

■ 1) -4

D0PCnnnnnnnnn
1 2

No.	Data name	Max. digits	Input range	Sup-press	Fix	Remarks
1	Production count command	2		×	○	● Output command for the production count
2	Production count	9	0 to 999999999	×	○	

■ 1) -5

D0CCnnnnnnnnn
1 2

No.	Data name	Max. digits	Input range	Sup-press	Fix	Remarks
1	Production circuit count command	2		×	○	● Output command for the production circuit count
2	Production circuit count	9	0 to 999999999	×	○	

■ 1) -6

D0PTnnnnn : nn : nn
1 2

No.	Data name	Max. digits	Input range	Sup-press	Fix	Remarks
1	Power ON time command	2		×	○	● Output command for the operation time
2	Operation time	11	0 : 0 : 0 to 99999 : 59 : 59	×	○	● Output in the format of hour, minute, second.

■ 1) -7

D0OTnnnnn : nn : nn
1 2

No.	Data name	Max. digits	Input range	Sup-press	Fix	Remarks
1	Operation time command	2		×	○	● Output command for the operation time
2	Operation time	11	0 : 0 : 0 to 99999 : 59 : 59	×	○	● Output in the format of hour, minute, second.

■ 1) -8

D0PRnnnnn : nn : nn
1 2

No.	Data name	Max. digits	Input range	Sup-press	Fix	Remarks
1	Operation ready time command	2		×	○	● Output command for the operation ready time
2	Operation ready time	11	0 : 0 : 0 to 99999 : 59 : 59	×	○	● Output in the format of hour, minute, second.

■ 1) -9

D0MTnnnnn : nn : nn
1 2

No.	Data name	Max. digits	Input range	Sup-press	Fix	Remarks
1	Maintenance time command	2		×	○	● Output command for the maintenance time
2	Maintenance time	11	0 : 0 : 0 to 99999 : 59 : 59	×	○	● Output in the format of hour, minute, second.

■ 1) -10

D0WLnnnnn : nn : nn
1 2

No.	Data name	Max. digits	Input range	Sup-press	Fix	Remarks
1	PCB waiting time command	2		×	○	● Output command for the PCB waiting time (loader)
2	PCB waiting time (loader)	11	0 : 0 : 0 to 99999 : 59 : 59	×	○	● Output in the format of hour, minute, second.

■ 1) -11

D0WUnnnnn : nn : nn
1 2

No.	Data name	Max. digits	Input range	Sup-press	Fix	Remarks
1	PCB waiting time command	2		×	○	● Output command for the PCB waiting time (unloader)
2	PCB waiting time (unloader)	11	0 : 0 : 0 to 99999 : 59 : 59	×	○	● Output in the format of hour, minute, second.

■ 1) -12

D0TTnnnnn : nn : nn
1 2

No.	Data name	Max. digits	Input range	Sup-press	Fix	Remarks
1	Trouble time command	2		×	○	● Output command for the trouble time
2	Trouble time	11	0 : 0 : 0 to 99999 : 59 : 59	×	○	● Output in the format of hour, minute, second.

■ 1) -13

D0ITnnnnn : nn : nn
1 2

No.	Data name	Max. digits	Input range	Sup-press	Fix	Remarks
1	Insertion error time command	2		×	○	● Output command for the insertion error time
2	Insertion error time	11	0 : 0 : 0 to 99999 : 59 : 59	×	○	● Output in the format of hour, minute, second.

■ 1) -14

D0ETnnnnn : nn : nn
1 2

No.	Data name	Max. digits	Input range	Sup-press	Fix	Remarks
1	Parts exhaust time command	2		×	○	● Output command for the parts exhaust time
2	Parts exhaust time	11	0 : 0 : 0 to 99999 : 59 : 59	×	○	● Output in the format of hour, minute, second.

■ 1) -15

D0TRnnnnnn
1 2

No.	Data name	Max. digits	Input range	Sup-press	Fix	Remarks
1	Total insertion rate command	2		×	○	● Output command for the total insertion rate
2	Total insertion rate	6	0 to 100000	×	○	● 1 / 1000% increments

■ 1) -16

D0IRnnnnnn
1 2

No.	Data name	Max. digits	Input range	Sup-press	Fix	Remarks
1	Insertion rate command	2		×	○	● Output command for the insertion rate
2	Insertion rate	6	0 to 100000	×	○	● 1 / 1000% increments

■ 1) -17

D0ORnnnnnn
1 2

No.	Data name	Max. digits	Input range	Sup-press	Fix	Remarks
1	Operating rate command	2		×	○	● Output command for the operating rate
2	Operating rate	6	0 to 100000	×	○	● 1 / 1000% increments

■ 1) -18

D0ICnnnnnnnnn
1 2

No.	Data name	Max. digits	Input range	Sup-press	Fix	Remarks
1	Insertion count command	2		×	○	● Output command for the Insertion count
2	Insertion count	9	0 to 999999999	×	○	

■ 1) -19

D0IEnnnnnnnnn
1 2

No.	Data name	Max. digits	Input range	Sup-press	Fix	Remarks
1	Insertion error count command	2		×	○	● Output command for the Insertion error count
2	Insertion error count	9	0 to 999999999	×	○	

■ 1) -20

D0RE<u>nnnnnnnnn</u>
1 2

No.	Data name	Max. digits	Input range	Sup-press	Fix	Remarks
1	Recovery error count command	2		×	○	● Output command for the recovery error count
2	Recovery error count	9	0 to 999999999	×	○	

■ 1) -21

D0TE<u>nnnnnnnnn</u>
1 2

No.	Data name	Max. digits	Input range	Sup-press	Fix	Remarks
1	Total insertion error count command	2		×	○	● Output command for the total insertion error count
2	Total insertion error count	9	0 to 999999999	×	○	

■ 1) -22

D0LE<u>nnnnnnnnn</u>
1 2

No.	Data name	Max. digits	Input range	Sup-press	Fix	Remarks
1	Transfer error count command	2		×	○	● Output command for the transfer error count
2	Transfer error count	9	0 to 999999999	×	○	

■ 1) -23

D0ES<u>nnnnnnnnn</u>
1 2

No.	Data name	Max. digits	Input range	Sup-press	Fix	Remarks
1	Error stop count command	2		×	○	● Output command for the error stop count
2	Error stop count	9	0 to 999999999	×	○	

■ 1) -24

D0PEnnnnnnnnn
1 2

No.	Data name	Max. digits	Input range	Sup-press	Fix	Remarks
1	Parts exhaust count command	2		×	○	● Output command for the parts exhaust count
2	Parts exhaust count	9	0 to 999999999	×	○	

■ Protocol

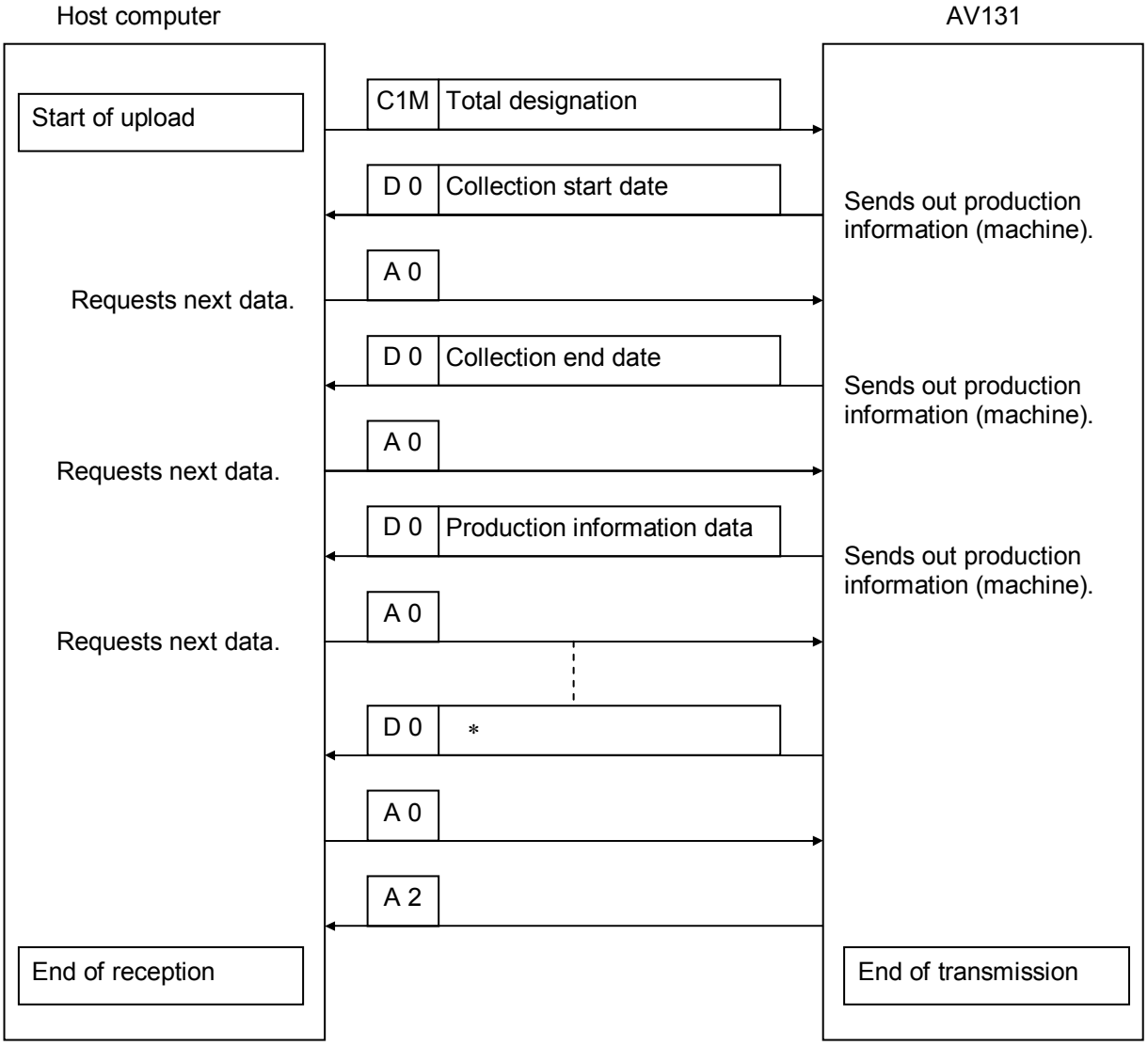

■ Condition

- Can be used in standard specification.
- Valid in ONLINE mode only.
- After receiving 'A2' from HOST, the processing ends.
- If added to the name, the possible designated name will become to upload NC data command.
  =📖= As for the transfer data, see the 'C1N command specification'.

3.6. Uploading Production Information (NC)

D79HEC-53-140-A0

3.6.1 Uploading Production Information (NC)

With AV131, if host computer gives C1 command to AV131, the AV131 becomes the receiving mode of the internal production information (NC) and then can read the production information (NC) (using C1 command) sent to the AV131.

■ Data details

■ 1) -1

C1N<u>nnn</u>
1

No.	Data name	Max. digits	Input range	Sup-press	Variable	Remarks
1	Total designation	3	000 to 900	×	○	● =000: Sub-total (no clear after upload) ● =900: Grand total (clear after upload) (≠900 is sub-total)

AV131 ⇒ Host computer

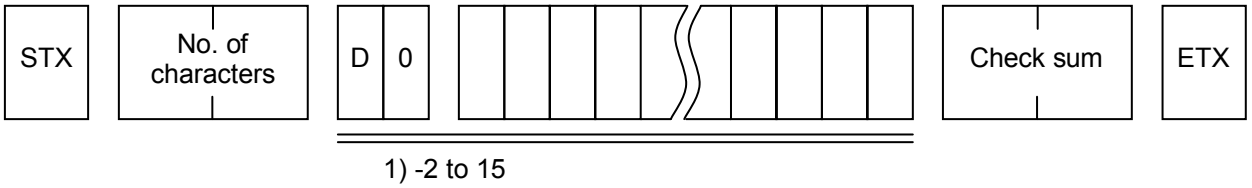

■ 1) -2

D0<u>SD</u><u>nnnn</u> / <u>nn</u> / <u>nn</u> ␣␣ <u>nn</u> : <u>nn</u>
1 2 3 4 5 6

No.	Data name	Max. digits	Input range	Sup-press	Variable	Remarks
1	Collection start date	2		×	○	● Output command for the production information collection start date
2	Year (AD)	4	1991 to 2nnn	×	○	● Corresponding to AD 2000
3	Month	2	01 to 12	×	○	
4	Date	2	01 to 31	×	○	
5	Time	2	00 to 23	×	○	
6	Minute	2	00 to 59	×	○	

■ 1) -3

D0ED nnnn / nn / nn ␣␣ nn : nn
1 2 3 4 5 6

No.	Data name	Max. digits	Input range	Sup-press	Fix	Remarks
1	Collection end date	2		×	○	● Output command for the production information collection end date
2	Year (AD)	4	1991 to 2nnn	×	○	● Corresponding to AD 2000
3	Month	2	01 to 12	×	○	
4	Date	2	01 to 31	×	○	
5	Time	2	00 to 23	×	○	
6	Minute	2	00 to 59	×	○	

■ 1) -4

D0PPnnnnnnnnn
1 2

No.	Data name	Max. digits	Input range	Sup-press	Fix	Remarks
1	Planned production count command	2		×	○	● Output command for the planned production count
2	Planned production count	9	0 to 999999999	×	○	

■ 1) -5

D0PCnnnnnnnnn
1 2

No.	Data name	Max. digits	Input range	Sup-press	Fix	Remarks
1	Production count command	2		×	○	● Output command for the production count
2	Production count	9	0 to 999999999	×	○	

■ 1) -6

D0CCnnnnnnnnn
1 2

No.	Data name	Max. digits	Input range	Sup-press	Fix	Remarks
1	Production circuit count command	2		×	○	● Output command for the production circuit count
2	Production circuit count	9	0 to 999999999	×	○	

■ 1) -7

D0TRnnnnnn
1 2

No.	Data name	Max. digits	Input range	Sup-press	Fix	Remarks
1	Total insertion rate command	2		×	○	● Output command for the total insertion rate
2	Total insertion rate	6	0 to 100000	×	○	● 1 / 1000% increments

■ 1) -8

D0IRnnnnnn
1 2

No.	Data name	Max. digits	Input range	Sup-press	Fix	Remarks
1	Insertion rate command	2		×	○	● Output command for the insertion rate
2	Insertion rate	6	0 to 100000	×	○	● 1 / 1000% increments

■ 1) -9

D0ICnnnnnnnnn
1 2

No.	Data name	Max. digits	Input range	Sup-press	Fix	Remarks
1	Insertion count command	2		×	○	● Output command for the Insertion count
2	Insertion count	9	0 to 999999999	×	○	

■ 1) -10

D0IEnnnnnnnnn
1 2

No.	Data name	Max. digits	Input range	Sup-press	Fix	Remarks
1	Insertion error count command	2		×	○	● Output command for the Insertion error count
2	Insertion error count	9	0 to 999999999	×	○	

■ 1) -11

D0REnnnnnnnnn
1 2

No.	Data name	Max. digits	Input range	Sup-press	Fix	Remarks
1	Recovery error count command	2		×	○	● Output command for the recovery error count
2	Recovery error count	9	0 to 999999999	×	○	

■ 1) -12

D0TEnnnnnnnnn
1 2

No.	Data name	Max. digits	Input range	Sup-press	Fix	Remarks
1	Total insertion error count command	2		×	○	● Output command for the total insertion error count
2	Total insertion error count	9	0 to 999999999	×	○	

■ 1) -13

D0LEnnnnnnnnn
1 2

No.	Data name	Max. digits	Input range	Sup-press	Variable	Remarks
1	Transfer error count command	2		×	○	● Output command for the transfer error count
2	Transfer error count	9	0 to 999999999	×	○	

■ 1) -14

D0ESnnnnnnnnn
1 2

No.	Data name	Max. digits	Input range	Sup-press	Fix	Remarks
1	Error stop count command	2		×	○	● Output command for the error stop count
2	Error stop count	9	0 to 999999999	×	○	

■ 1) -15

D0PEnnnnnnnnn
1 2

No.	Data name	Max. digits	Input range	Sup-press	Fix	Remarks
1	Parts exhaust count command	2		×	○	● Output command for the parts exhaust count
2	Parts exhaust count	9	0 to 999999999	×	○	

■ Protocol

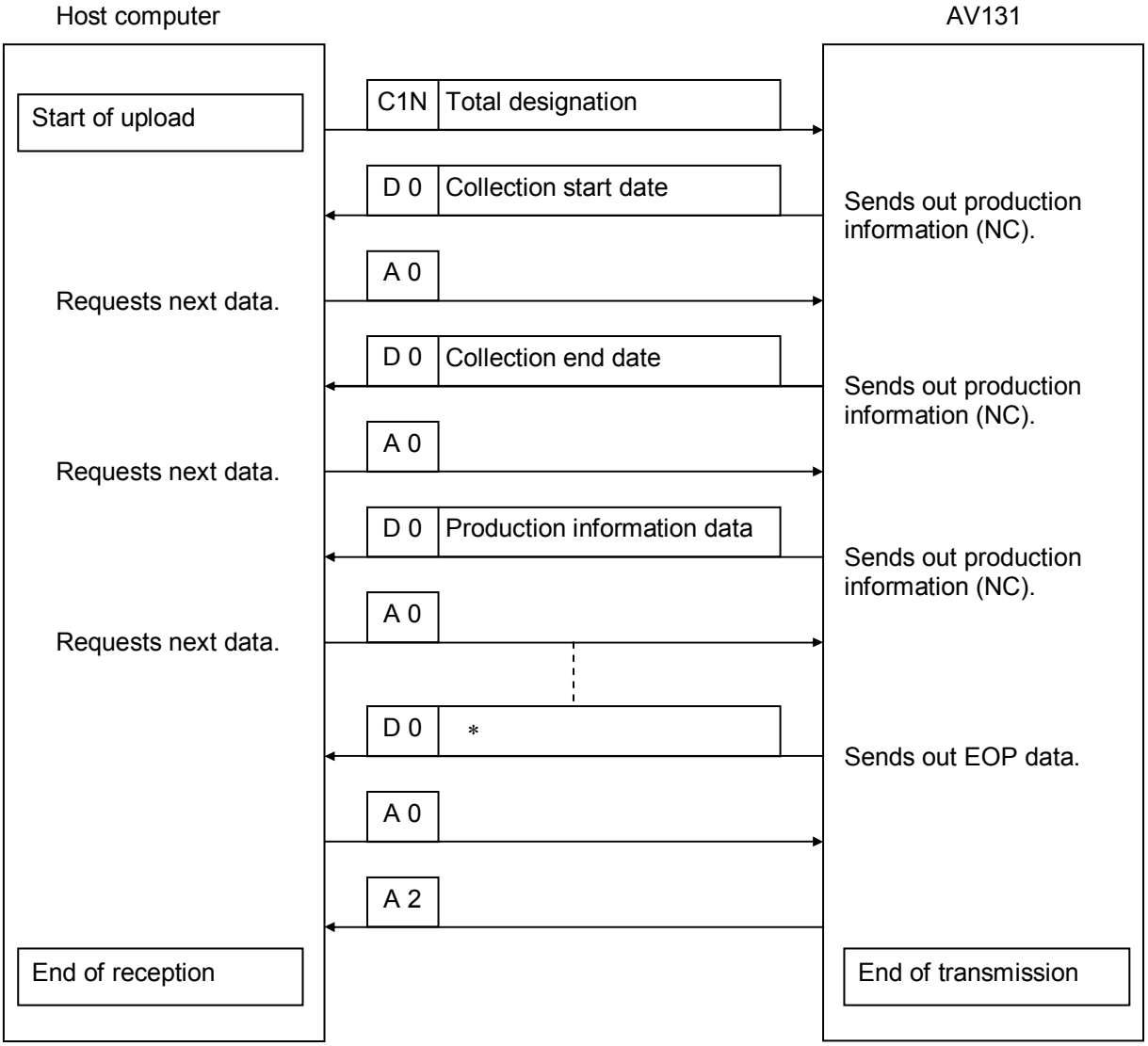

■ Condition

- Can be used in standard specification.
- Valid in ONLINE mode only.
- After receiving ‘A2’ from HOST, the processing ends.
- This information is held in each program. The information to be output will be the information of the executing program.

3.7. Uploading Feeder Information

D79HEC-53-150-A0

3.7.1 Uploading Feeder Information

With AV131, if host computer gives C1 command to AV131, the AV131 becomes the receiving mode of the internal feeder information and then can read the feeder information (using C1 command) sent to the AV131.

■ Data details

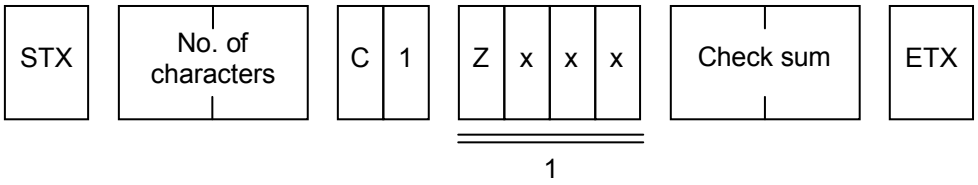

No.	Data name	Max. digits	Input range	Sup-press	Vari-able	Remarks
1	Total designation	3	000 to 900	×	○	● =000: Sub-total (no clear after upload) ● =900: Grand total (clear after upload) (≠900 is sub-total)

AV131 ⇒ Host computer

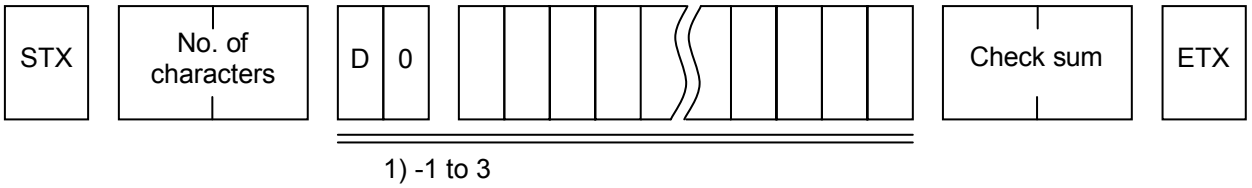

■ 1) -1

D0SDnnnn / nn / nn ␣␣ nn : nn
1 2 3 4 5 6

No.	Data name	Max. digits	Input range	Sup-press	Fix	Remarks
1	Collection start date	2		×	○	● Output command for the production information collection start date
2	Year (AD)	4	1991 to 2nnn	×	○	● Corresponding to AD 2000
3	Month	2	01 to 12	×	○	
4	Date	2	01 to 31	×	○	
5	Hour	2	00 to 23	×	○	
6	Minute	2	00 to 59	×	○	

■ 1) -2

D0EDnnnn / nn / nn ␣␣ nn : nn
1 2 3 4 5 6

No.	Data name	Max. digits	Input range	Sup-press	Fix	Remarks
1	Collection end date	2		×	○	● Output command for the production information collection end date
2	Year (AD)	4	1991 to 2nnn	×	○	● Corresponding to AD 2000
3	Month	2	01 to 12	×	○	
4	Date	2	01 to 31	×	○	
5	Hour	2	00 to 23	×	○	
6	Minute	2	00 to 59	×	○	

■ 1) -3

D0Znnn Snnnnnnn Rnnnnnnn Innnnnnnnn
1 2 3 4
Ennnnnnnnn Pnnnnnn Nnnn
5 6 7

No.	Data name	Max. digits	Input range	Sup-press	Fix	Remarks
1	Z axis No.	3	1 to 080	×	○	
2	Set parts number	7	0 to 9999999	×	○	
3	Parts remainder	7	0 to 9999999	×	○	
4	No. of insertion points	9	0 to 999999999	×	○	
5	Insertion error count	9	0 to 999999999	×	○	
6	Insertion rate	6	0 to 100000	×	○	● 1 / 1000% increments
7	Parts exhaust count	3	1 to 999	×	○	

■ Protocol

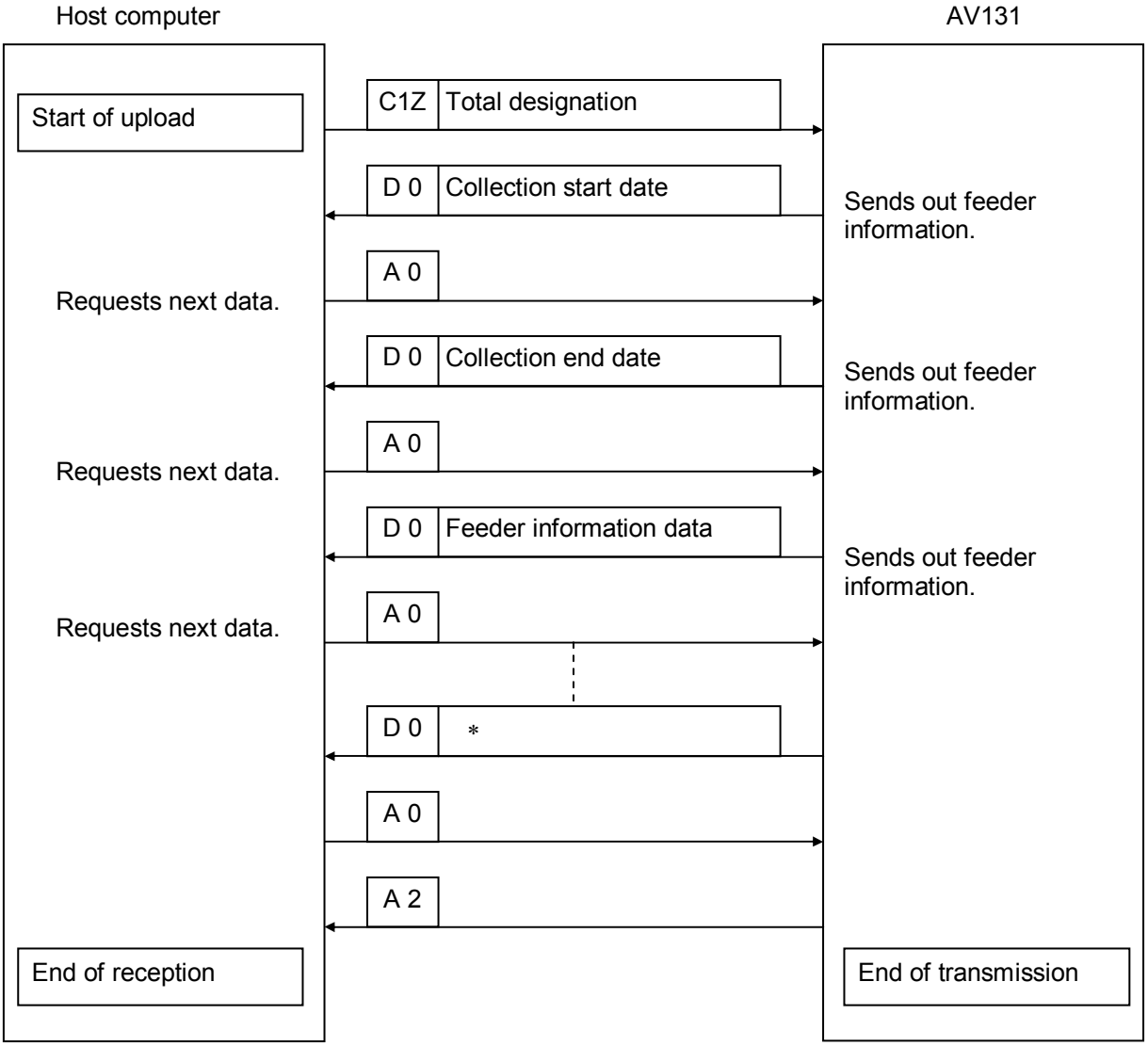

■ Condition

- Can be used in standard specification.
- Valid in ONLINE mode only.
- After receiving ‘A2’ from HOST, the processing ends.

3.8. Uploading Rotary Chuck Information

D79HEC-53-160-A0

3.8.1 Uploading Rotary Chuck Information

With AV131, if host computer gives C1 command to AV131, the AV131 becomes the receiving mode of the internal rotary chuck information and then can read the rotary chuck information (using C1 command) sent to the AV131.

■ Data details

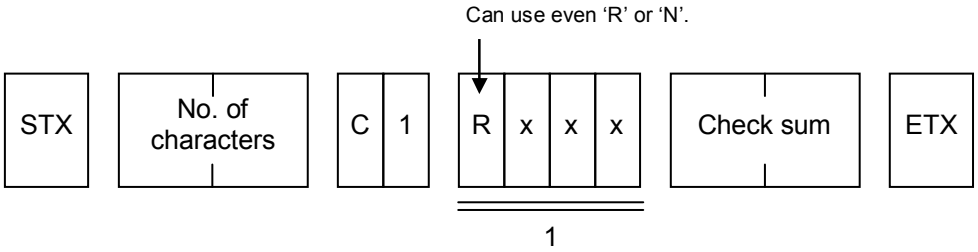

■ 1) -1

C1R<u>nnn</u>
1

No.	Data name	Max. digits	Input range	Sup-press	Variable	Remarks
1	Total designation	3	000 ~ 900	×	○	● =000: Sub-total (no clear after upload) ● =900: Grand total (clear after upload) (≠900 is sub-total)

■ 1) -2

D0<u>SD</u><u>nnnn</u> / <u>nn</u> / <u>nn</u> ␣␣ <u>nn</u> : <u>nn</u>
1 2 3 4 5 6

No.	Data name	Max. digits	Input range	Sup-press	Fix	Remarks
1	Collection start date	2		×	○	● Output command for the production information collection start date
2	Year (AD)	4	1991 to 2nnn	×	○	● Corresponding to AD 2000
3	Month	2	01 to 12	×	○	
4	Date	2	01 to 31	×	○	
5	Hour	2	00 to 23	×	○	
6	Minute	2	00 to 59	×	○	

■ 1) -3

D0EDnnnn / nn / nn ␣␣ nn : nn
1 2 3 4 5 6

No.	Data name	Max. digits	Input range	Sup-press	Fix	Remarks
1	Collection end date	2		×	○	● Output command for the production information collection end date
2	Year (AD)	4	1991 to 2nnn	×	○	● Corresponding to AD 2000
3	Month	2	01 to 12	×	○	
4	Date	2	01 to 31	×	○	
5	Hour	2	00 to 23	×	○	
6	Minute	2	00 to 59	×	○	

■ 1) -4

D0HnTnnnnnnnnnnEnnnnnnnnnnInnnnnnnnnn
1 2 3 4 5
PnnnnnnnnnnRnnnnnnWn
6 7 8

No.	Data name	Max. digits	Input range	Sup-press	Fix	Remarks
1	26 mm chuck command	1		×	○	● Output command for the 26 mm rotary chuck information
2	Chuck No.	1	1 to 4	×	○	
3	Parts chuck count	10	0 to 999999999	×	○	
4	Insertion error count	10	0 to 999999999	×	○	
5	No. of insertion points	10	0 to 999999999	×	○	
6	Parts remove count	10	0 to 999999999	×	○	
7	Insertion rate	6	0 to 100000	×	○	● 1 / 1000% increments
8	Maintenance warning	1	0 to 1	×	○	● 0 = Insertion rate more than 99.01 ● 1 = Insertion rate less than 99.00

■ 1) -5

D0FnTnnnnnnnnnnEnnnnnnnnnnInnnnnnnnnn
1 2 3 4 5
Pnnnnnnnnnn Rnnnnnn Wn
6 7 8

No.	Data name	Max. digits	Input range	Sup-press	Fix	Remarks
1	52 mm chuck command	1		×	○	● Output command for the 52 mm rotary chuck information
2	Chuck No.	1	1 to 4	×	○	
3	Parts chuck count	10	0 to 999999999	×	○	
4	Insertion error count	10	0 to 999999999	×	○	
5	No. of insertion points	10	0 to 999999999	×	○	
6	Parts remove count	10	0 to 999999999	×	○	
7	Insertion rate	6	0 to 100000	×	○	● 1 / 1000% increments
8	Maintenance warning	1	0 to 1	×	○	● 0 = Insertion rate more than 99.01 ● 1 = Insertion rate less than 99.00

■ Protocol

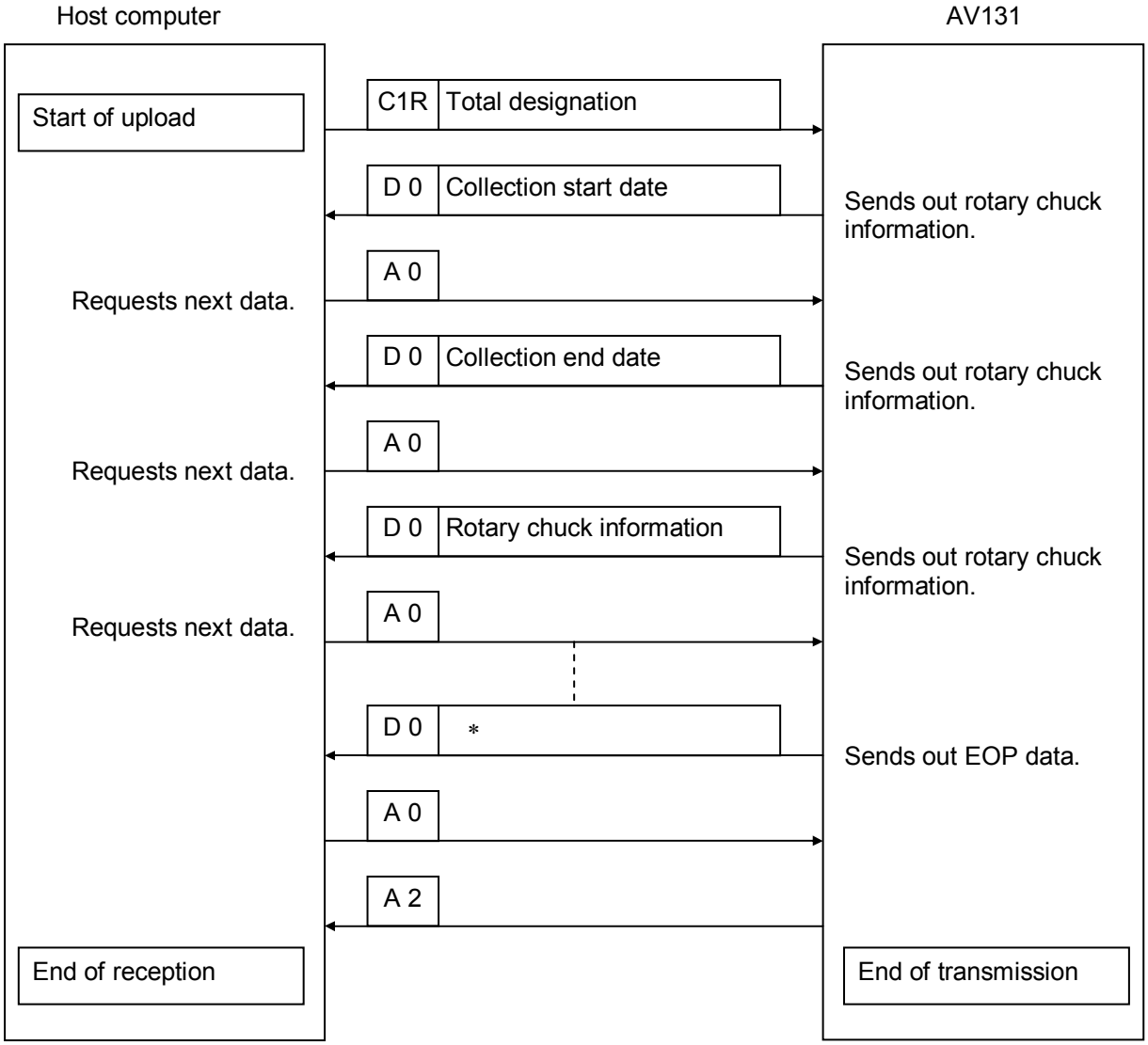

■ Condition

- Valid in ONLINE mode only.
- After receiving ‘A2’ from HOST, the processing ends.

3.9. Uploading NC Program Directory

D79HEC-53-100-A0

3.9.1 Uploading NC Program Directory

With AV131, if host computer gives C1 command to AV131, the AV131 becomes the receiving mode of the internal NC program directory and then can read the NC program directory (using C1 command) sent to the AV131.

■ Data details

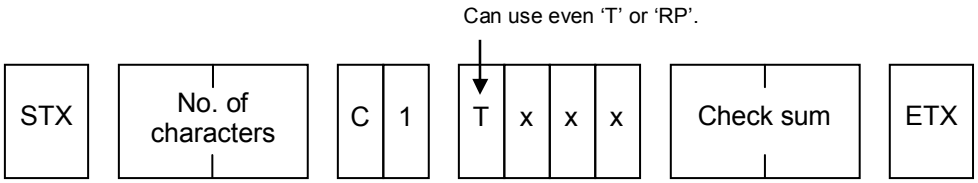

AV131 ⇒ Host computer

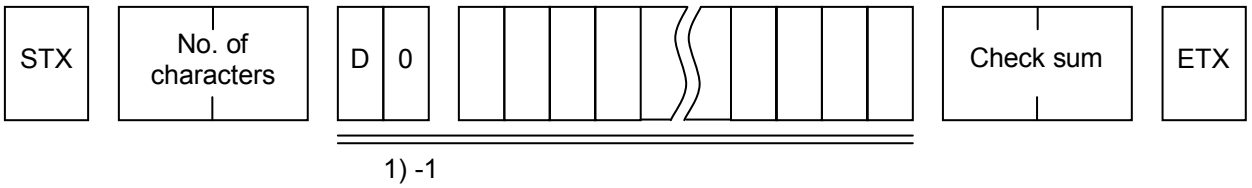

■ 1) -1

D0yyyy / mm / ddyyyy / mm / ddPxxx∗ ~ ∗
1 2 3

No.	Data name	Max. digits	Input range	Sup-press	Fix	Remarks
1	Registered date	10 (/ included)		×	○	● yyyy = Year (AD) ● mm = 01 to 12 ● dd = 01 to 31
2	Changed date	10 (/ included)		×	○	● yyyy = Year (AD) ● mm = 01 to 12 ● dd = 01 to 31
3	Program name	16		×	×	● f the characters of the control No. and name are less than 16 digits, output will be up to the registered length.

■ Protocol

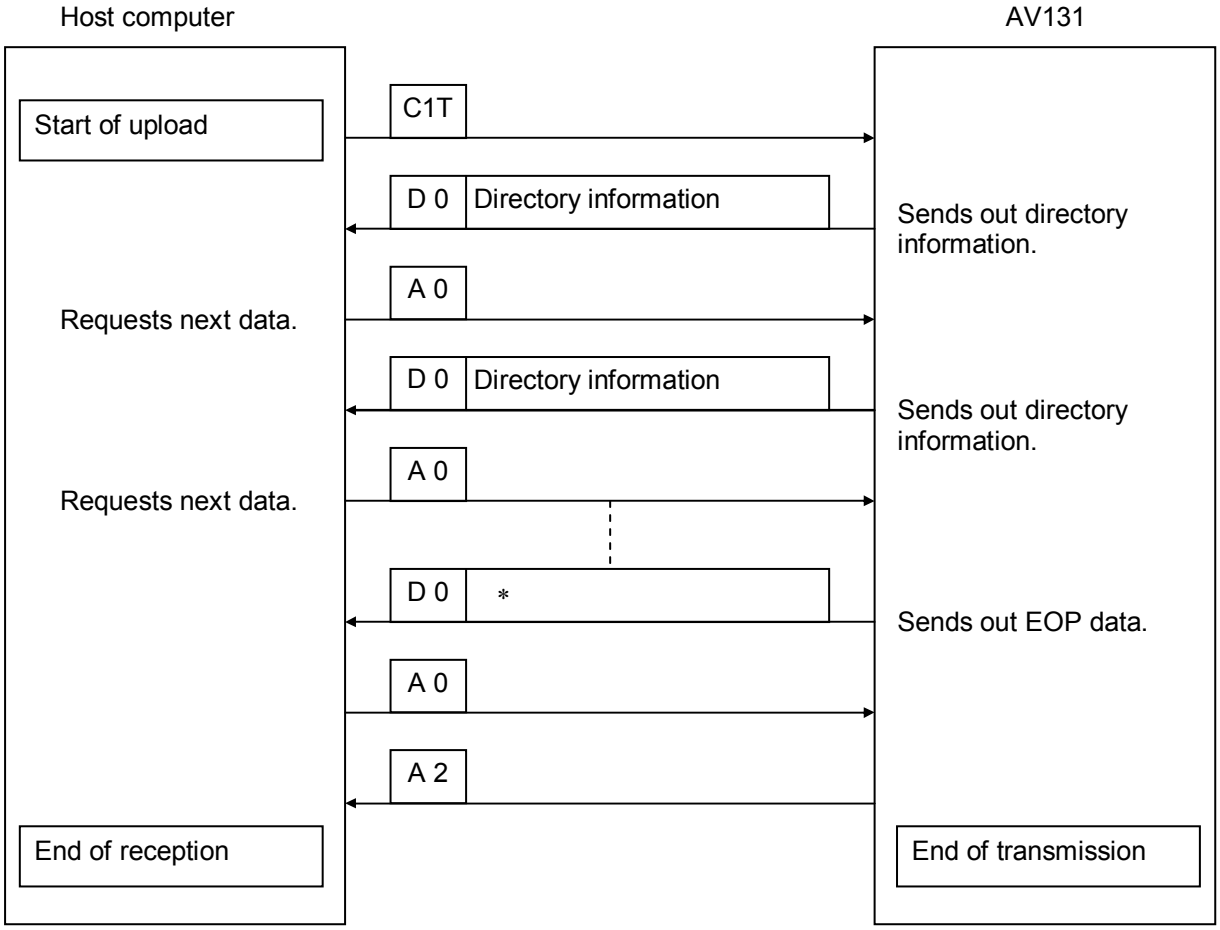

■ Condition

- Can be used in standard specification.
- Valid in ONLINE mode only.
- After receiving ‘A2’ from HOST, the processing ends.
- Directory information will be output as many as the number of registered directories.

3.10. Uploading P.C.B. Data Directory

D79HEC-53-090-A0

3.10.1 Uploading P.C.B. Data Directory

With AV131, if host computer gives C1 command to AV131, the AV131 becomes the receiving mode of the internal PCB data directory and then can read the PCB data directory (using C1 command) sent to the AV131.

■ Data details

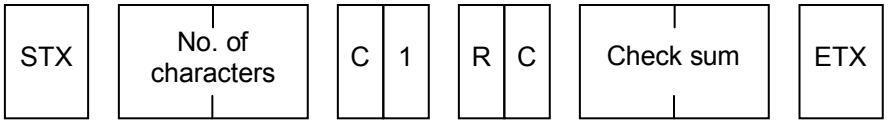

AV131 ⇒ Host computer

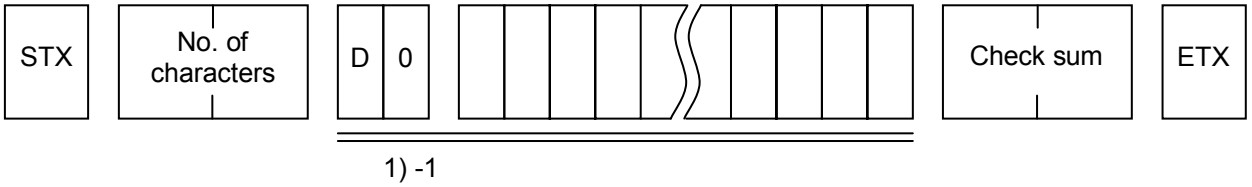

■ 1) -1

D0yyyy / mm / ddC∗ - ∗
1 2

No.	Data name	Max. digits	Input range	Sup-press	Fix	Remarks
1	Changed date	10 (/ included)		×	○	● yyyy = Year (AD) ● mm = 01 to 12 ● dd = 01 to 31
2	Program name	16		×	×	● If the characters of the control No. and name are less than 16 digits, output will be up to the registered length.

■ Protocol

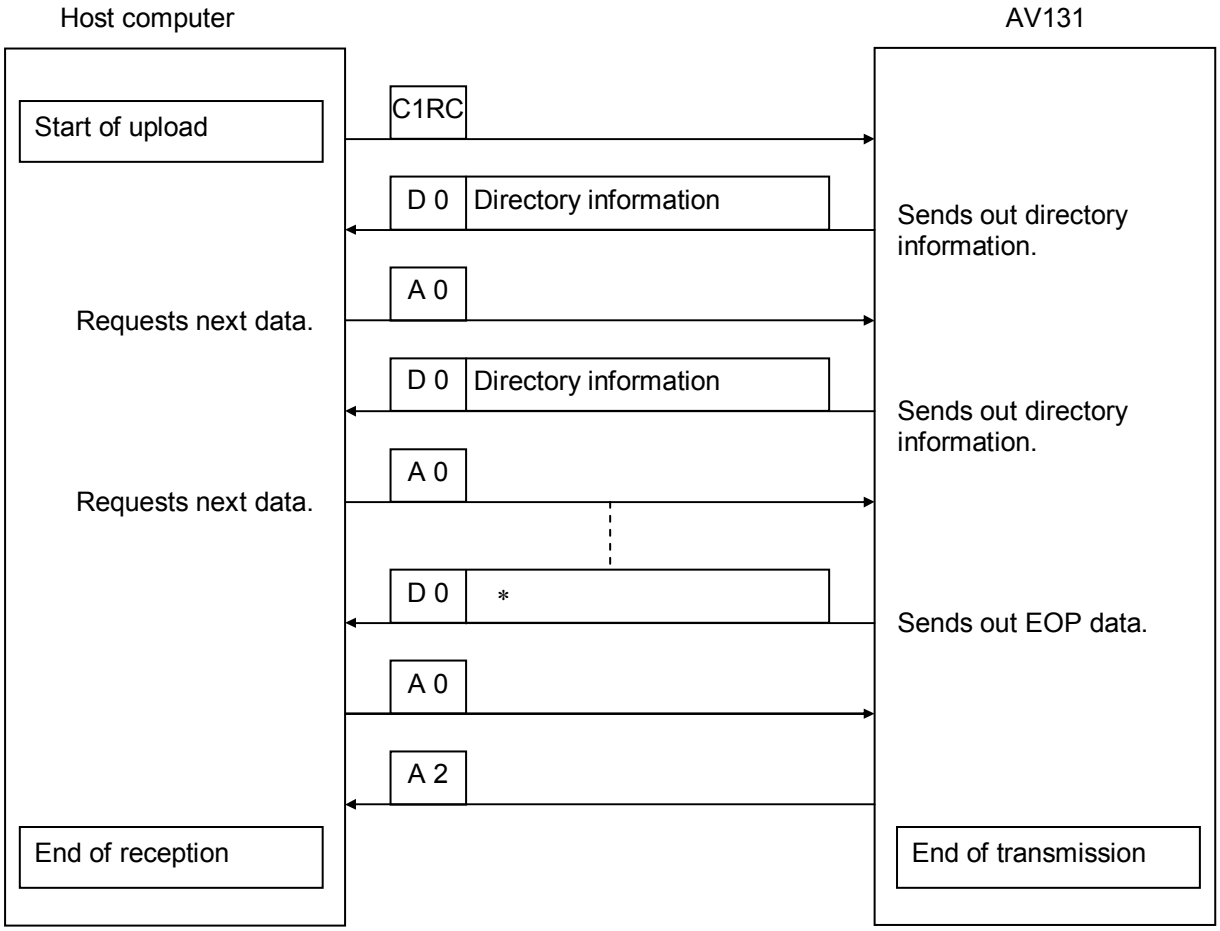

■ Condition

- Valid in ONLINE mode only.
- After receiving ‘A2’ from HOST, the processing ends.
- Directory information will be output as many as the number of registered directories.

3.11. Uploading Z Division Mode and L/R Selection

D79HEC-53-170-A0

3.11.1 Uploading Z Division Mode and L/R Selection

With AV131, if host computer gives C1 command to AV131, the AV131 becomes the receiving mode of the internal Z division mode and then can read the Z division mode (using C1 command) sent to the AV131.

■ Data details

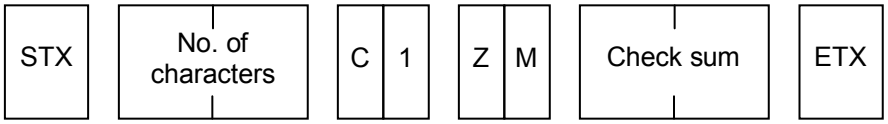

AV131 ⇒ Host computer

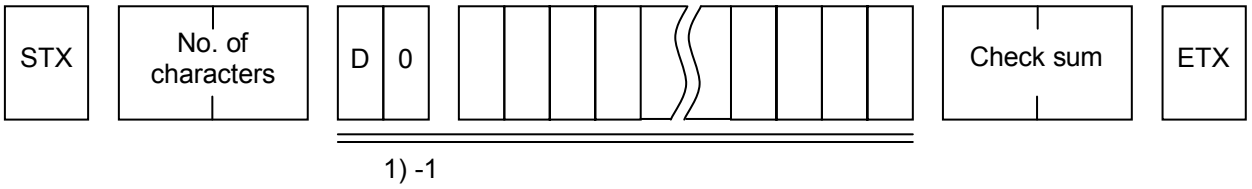

■ 1) -1

D0xx ␣␣ xx
1 2 3

No.	Data name	Max. digits	Input range	Sup-press	Fix	Remarks
1	Z mode	2		×	○	● = PE: Priority mode ● = EX: Exchange mode ● = PR: Preparation mode ● = CN: Connection mode
2	Reserve	2	Space	×	○	● For expansion
3	L/R selection	2		×	○	● = ZL: ZL selection ● = ZR: ZR selection ● = : If connection mode

■ Protocol

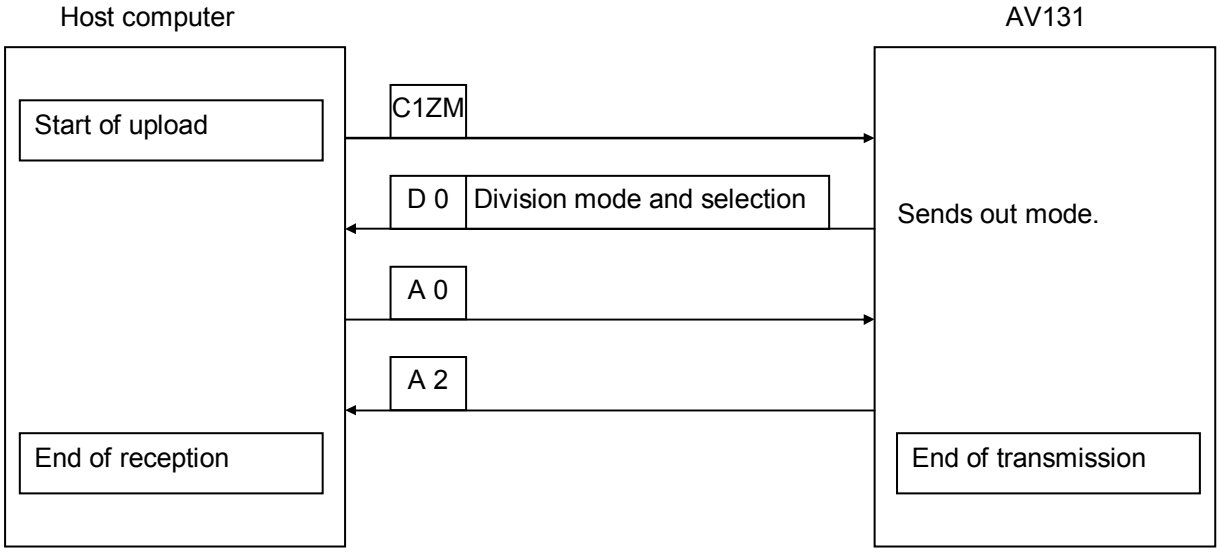

■ Condition

- Can be used in standard specification.
- Valid in ONLINE mode only.
- After receiving ‘A2’ from HOST, the processing ends.

3.12. Uploading Parts Data Directory

D79HEC-53-190-A0

3.12.1 Uploading Parts Data Directory

With AV131, if host computer gives C1 command to AV131, the AV131 becomes the receiving mode of the internal parts data directory and then can read the parts data directory (using C1 command) sent to the AV131.

■ Data details

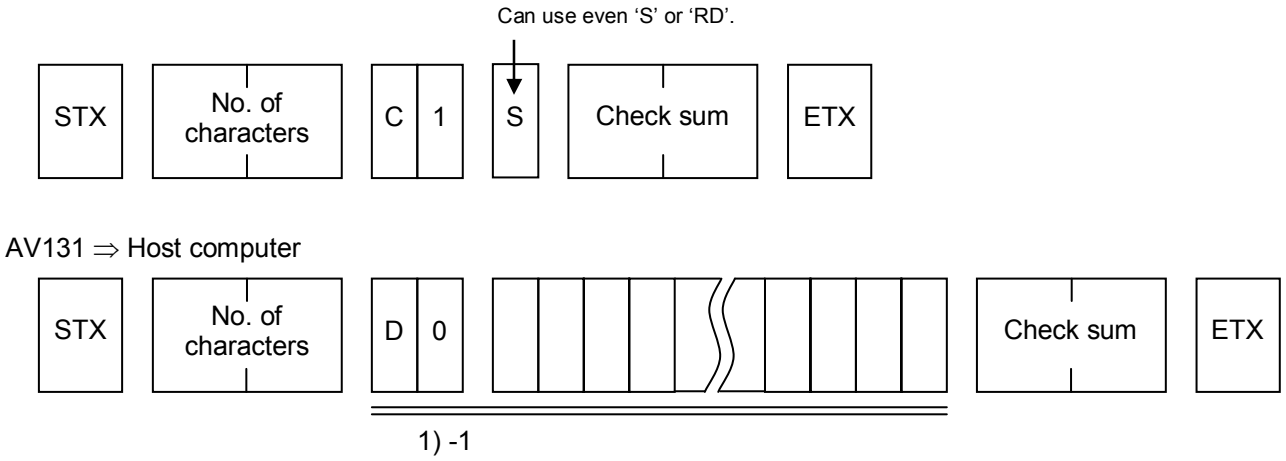

■ 1) -1

D0yyyy / mm / ddD∗ - ∗
1 2

No.	Data name	Max. digits	Input range	Sup-pres s	Vari-able	Remarks
1	Changed date	10 (/ included)		×	○	● yyyy = Year (AD) ● mm = 01 to 12 ● dd = 01 to 31
2	Program name	16		×	×	● If the characters of the control No. and name are less than 16 digits, output will be up to the registered length.

■ Protocol

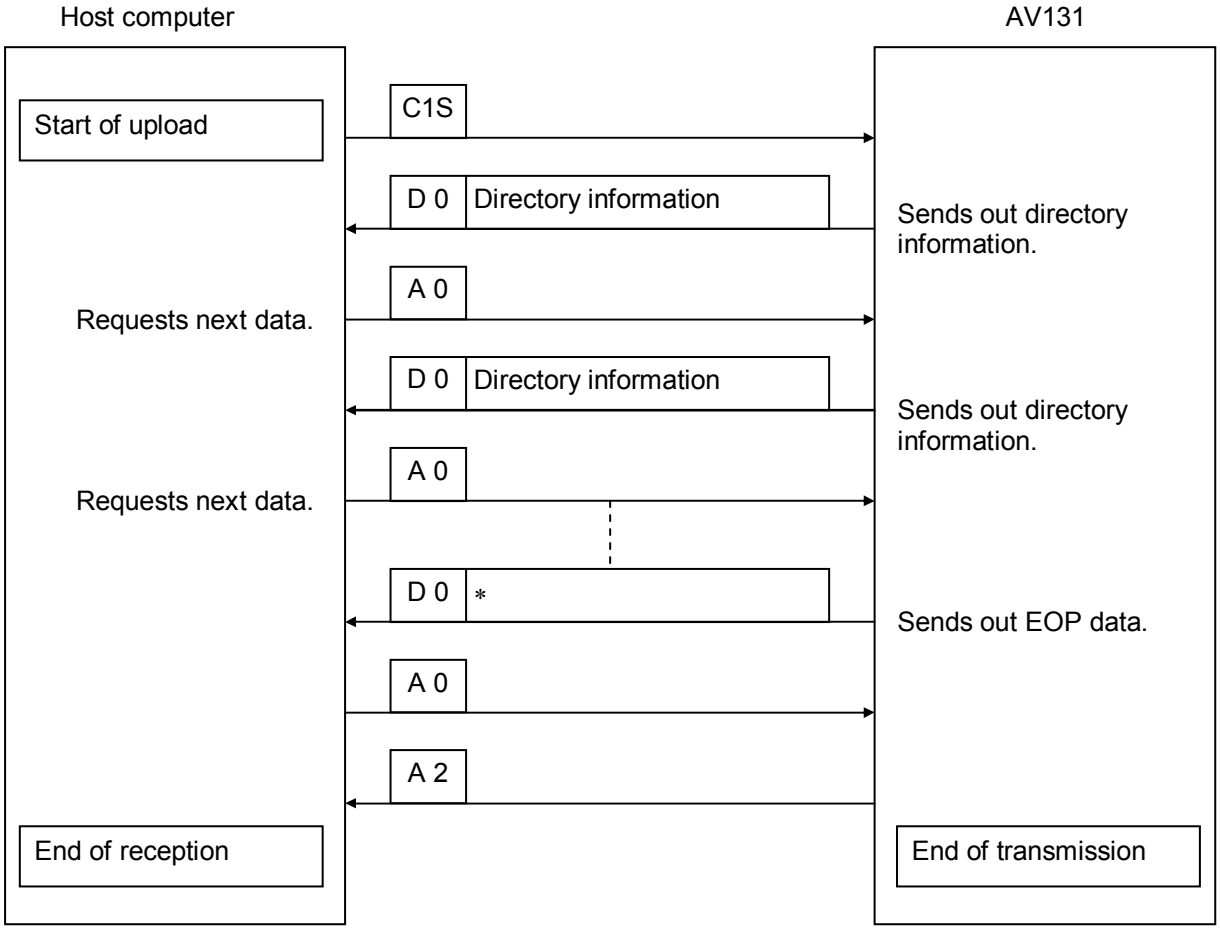

■ Condition

- Valid in ONLINE mode only.
- After receiving ‘A2’ from HOST, the processing ends.
- Directory information will be output as many as the number of registered directories.

4. INQUIRING AND ALTERING PROGRAMS

4.1. Inquiring and Altering NC Program Name

D79HEC-50-400-A0

4.1.1 Inquiring and Altering NC Program Name

If the host computer gives C3 command to AV131, the NC program names filled in AV131 can be inquired and/or altered.
Inquiring and alteration processing will end when A2 command is sent from the host computer.

■ Data details

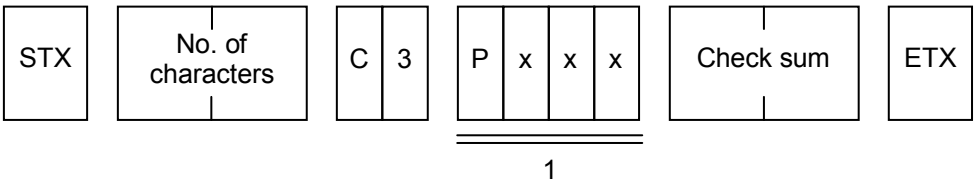

No.	Data name	Max. digits	Input range	Omit	Vari-able	Remarks
1	Data name	3	000 to FFF	○	○	● If less than 3 digits, ‘0’ is affixed to the front. Ex.) P1 → P001 ● If omitted, the execution program is to be inquired or altered. ● Even if a program name is added, the name is ignored.

NC program names can be altered by giving D1 command from the host computer.

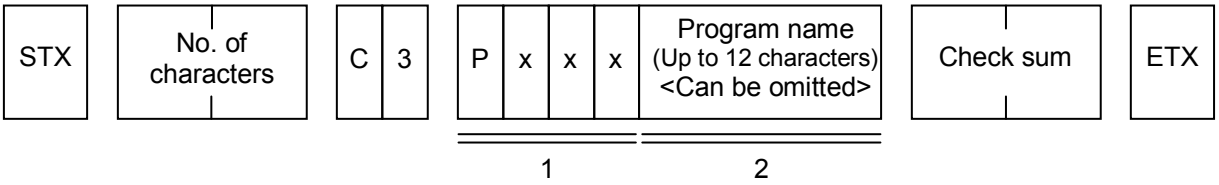

No.	Data name	Max. digits	Input range	Sup-pres s	Fix	Remarks
1	Data name	3	000 to FFF	×	○	● Inquiry control No. and alteration control No. must agree. ● If control No. with Host → AV131 only, the (change) name is eliminated. ● If less than 3 digits, ‘0’ is added in the front to make 3 digits.
2	Program name	12	‘0’ to ‘9’ ‘A’ to ‘Z’ Special character	×	○	● If blank spaces are added by alteration, the spaces will be ignored. Ex.) P001ABC ··· → P001ABC

■ Protocol

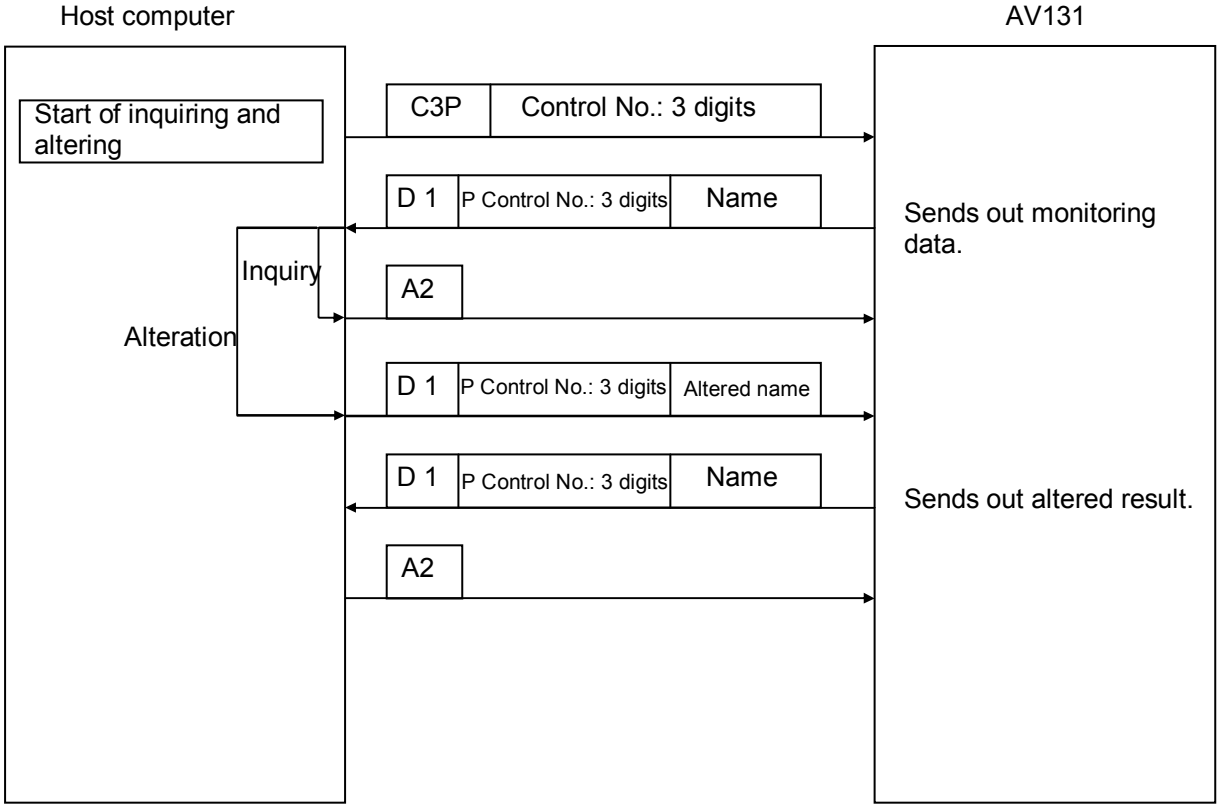

■ Condition

- Can be used in optional specification.
- Valid in ONLINE mode only.
- If an unregistered program is designated, ‘A4E00’ is returned.
- If the control No. to be inquired to and the control No. to be altered differ, ‘A4E00’ is returned.
- Alteration can be made as often as possible until ‘A2’ is received.

4.2. Inquiring and Altering Parts Program Name

D79HEC-50-410-A0

4.2.1 Inquiring and Altering Parts Program Name

If the host computer gives C3 command to AV131, the parts program names filled in AV131 can be inquired and/or altered.
Inquiring and alteration processing will end when A2 command is sent from the host computer.

■ Data details

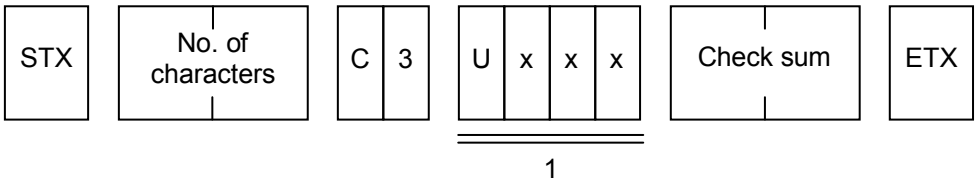

No.	Data name	Max. digits	Input range	Omit	Vari-able	Remarks
1	Data name	3	000 to FFF	○	○	● If less than 3 digits, ‘0’ is affixed to the front. Ex.) U1 → U001 ● If omitted, the execution program is to be inquired or altered. ● Even if a program name is added, the name is ignored.

Parts program names can be altered by giving D1 command from the host computer.

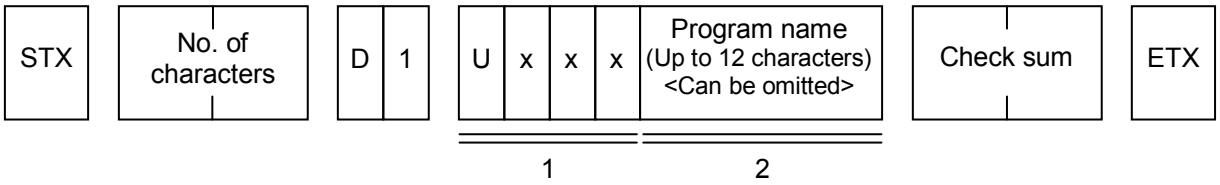

No.	Data name	Max. digits	Input range	Omit	Vari-able	Remarks
1	Data name	3	000 to FFF	×	○	● Inquiry control No. and alteration control No. must agree. ● If control No. with Host → AV131 only, the (change) name is eliminated. ● If less than 3 digits, ‘0’ is added in the front to make 3 digits.
2	Program name	12	‘0’ to ‘9’ ‘A’ to ‘Z’ Special character	×	○	● If blank spaces are added by alteration, the spaces will be ignored. Ex.) U001ABC ··· → U001ABC

■ Protocol

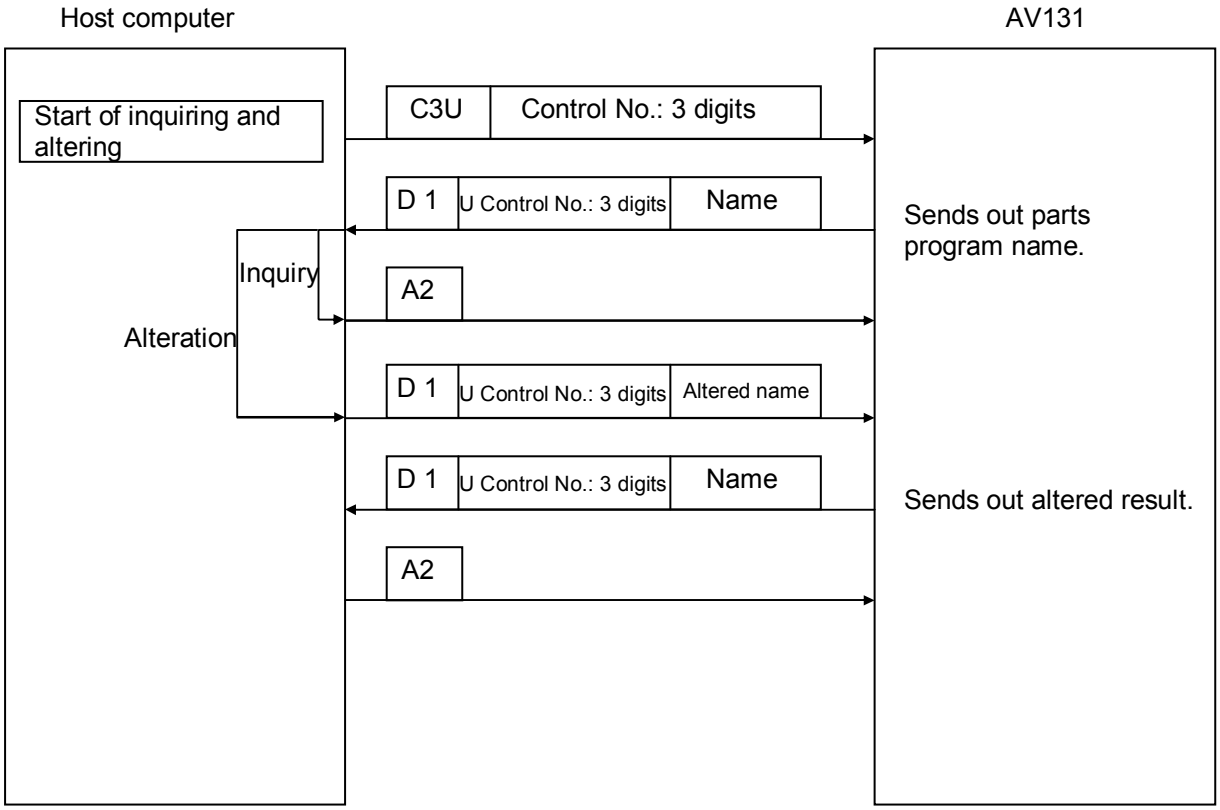

■ Condition

- Can be used in optional specification.
- Valid in ONLINE mode only.
- If an unregistered program is designated, ‘A4E00’ is returned.
- If the control No. to be inquired to and the control No. to be altered differ, ‘A4E00’ is returned.
- Alteration can be made as often as possible until ‘A2’ is received.

5. MACHINE CONTROL

5.1. C5 Remote Control: C5

D79HEC-5E-010-A0

This command is used when host computer actively operates the machine according to the production plan.
This command is optional, so consult with us separately.
Command data details are given as follows.

■ Starting command

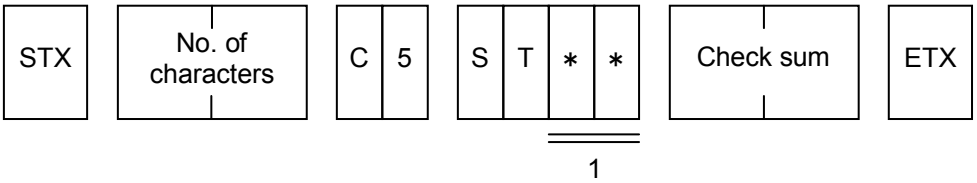

No.	Code	Data name	Remarks
1	None	Start	Machine starts without changing the stop mode.
	BL	1STEP start	Starts with switching to 1 STEP stop mode.
	EP	EOP start	Starts with switching to EOP stop mode.
	CT	CONT start	Starts with switching to CONT stop mode.
	RC	Recovery start	Conducts recovery.

=REMARKS=

- If insertion error is occurred, it becomes recovery skip start except the RC code.
- If insertion error is not occurred, ‘A4E00’ is returned to RC code.

■ Stopping command

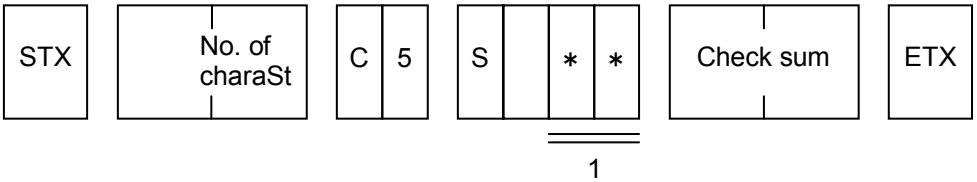

No.	Code	Data name	Remarks
1	BL	1STEP start	Switches to 1 STEP stop mode.
	EP	EOP start	Switches to EOP stop mode.
	CT	CONT start	Switches to CONT stop mode.

■ Reset command

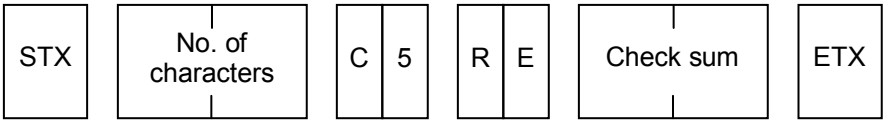

The machine can be reset from the host computer.

■ PC board convey control command

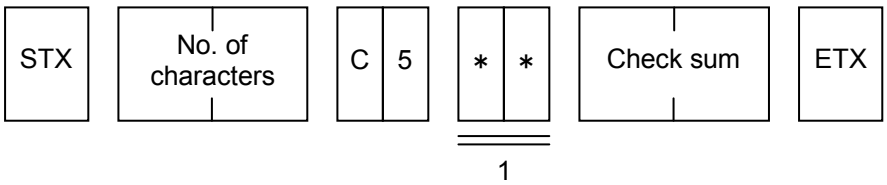

No.	Subcommand	Data name	Remarks
1	LP	PC board unload inhibit command	Inhibits unloading of PC board from magazine.
	UP	PC board sweep out command	Sweeps out PC board from XY table.

■ NC program selection

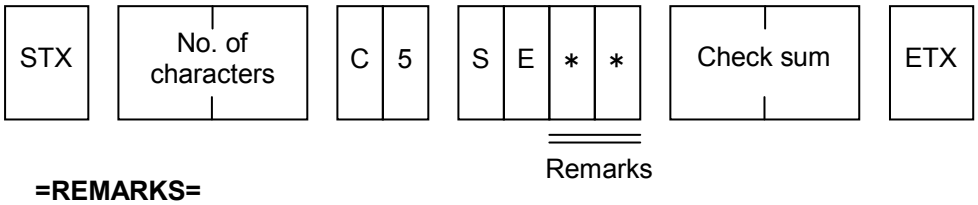

=REMARKS=
P∗∗∗
1

No.	Data name	Max. digits	Input range	Omit	Vari-able	Remarks
1	Data name	3	000 to FFF	×	○	● If other than the valid character within 3 digits, it becomes an error. ● If less than 3 digits, ‘0’ is affixed to the front. Ex.) P1 → P001 ● Even if a program name is added after the control No., the name is ignored. ● If unregistered, it becomes an error.

■ Parts program selection command

Enables to select parts program registered in AVK3.

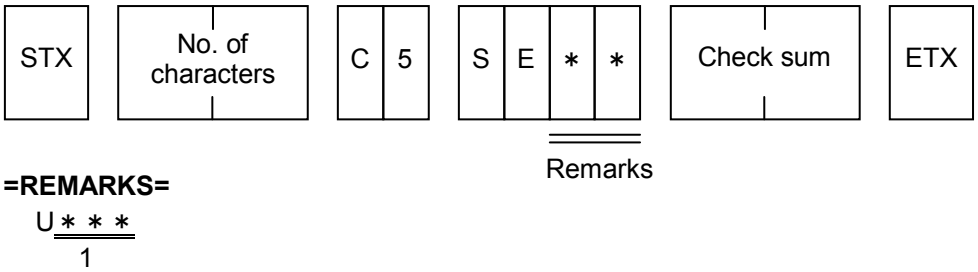

No.	Data name	Max. digits	Input range	Omit	Vari-able	Remarks
1	Data name	3	000 to FFF	×	○	● If other than the valid character within 3 digits, it becomes an error. ● If less than 3 digits, ‘0’ is affixed to the front. Ex.) U1 → U001 ● Even if a program name is added after the control No., the name is ignored. ● If unregistered, it becomes an error.

■ Protocol

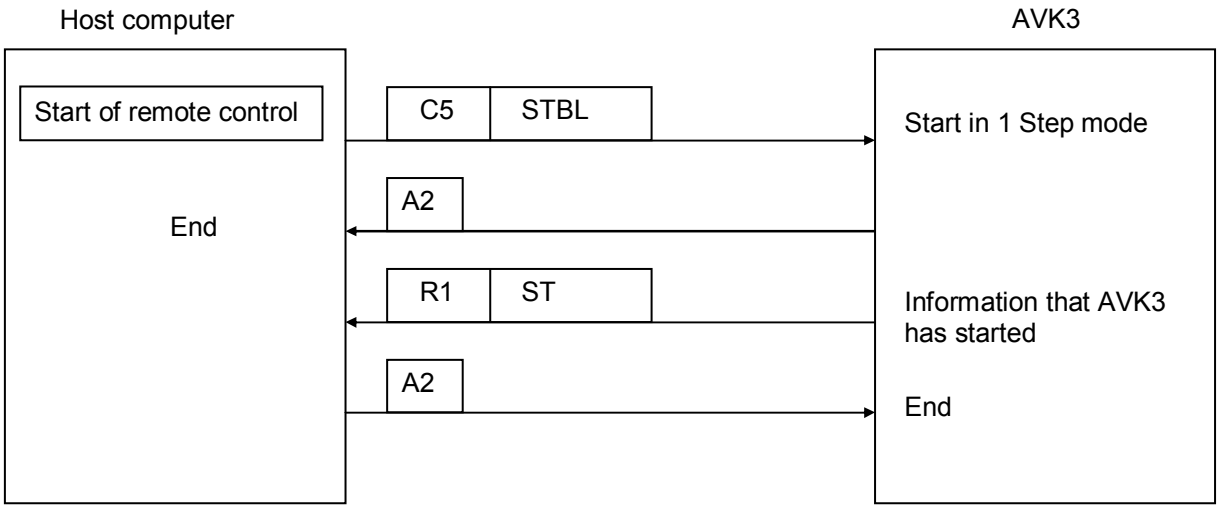

■ Condition

- Can be used in optional specification.
- Except for C501 command (ONLINE running lamp ON command), valid in ONLINE mode only.
- It ends with receipt of ‘A2’ from the HOST.

■ PCB data selection command

■ Data details

C5SEC＊ ~ ＊
1

No.	Data name	Max. digits	Input range	Sup-press	Fix	Remarks
1	Program name	15	‘0’ to ‘9’ ‘A’ to ‘Z’ Special character	×	○	● If other than the valid character, ‘A4E00’ is returned. ● If the name is not registered, ‘A4E00’ is returned.

■ Protocol

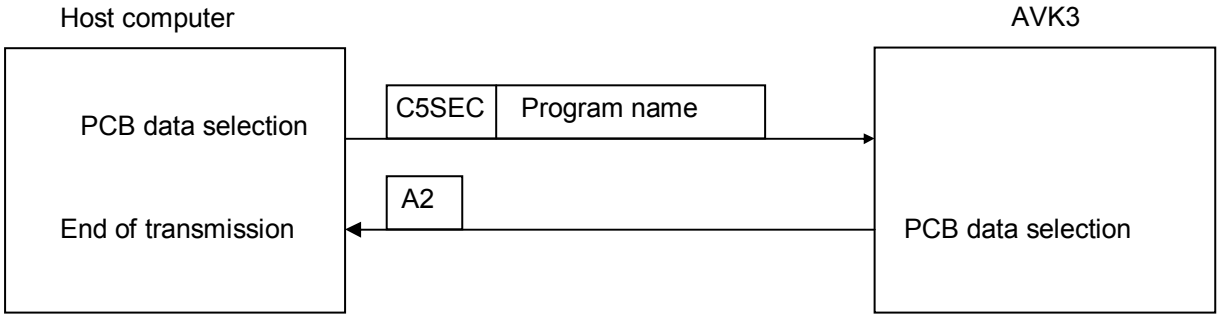

■ Condition

- Valid in ONLINE mode only.
- During the machine operation, ‘A4E00’ is returned.

■ Width control operation

STX	No. of characters	C	5	S	E	*	*	Check sum	ETX

■ Data details

C5WCxx
1

No.	Data name	Max. digits	Input range	Sup-press	Fix	Remarks
1	Width control operation	2	None	○	○	● Execute width control operation (machine switching).

■ Protocol

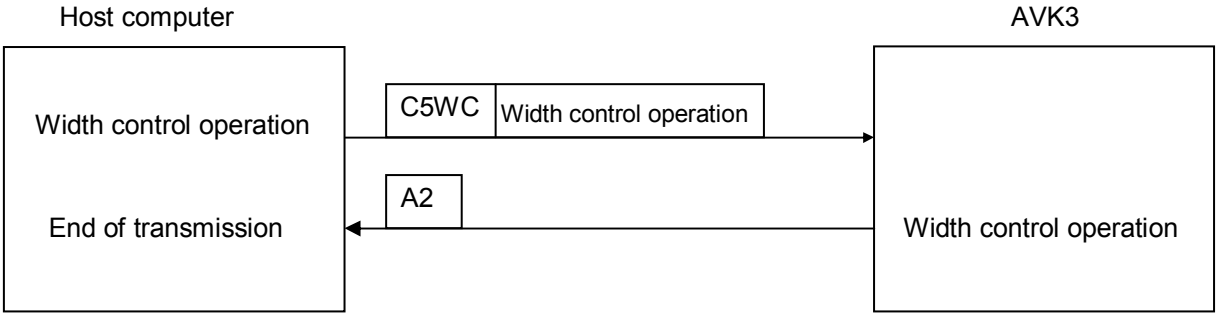

■ Condition

- Valid in ONLINE mode only.
- It ends with receipt of ‘A2’ from the HOST.

5.2. R Commands: R0,R1,R2,R3

D79HEC-55-020-A0

R (real time) command is to inform the host computer of the changes of conditions during the production work of AV131 whenever they occur. This is used as a remote control or to collect production control information. However, when the host computer is used just for transmission of NC data, if R command is received, it causes inconveniences. As indicated in '1.1.6 Changing Data Transmission Mode', it is possible to use the selector switch so that R command does not occur.

5.2.1 Production Quantity Information: R0

R0 Command is used for totaling the hours worked by AV131 which started operating by the remote control command. R0 command has the following 4 functions.

■ Data details

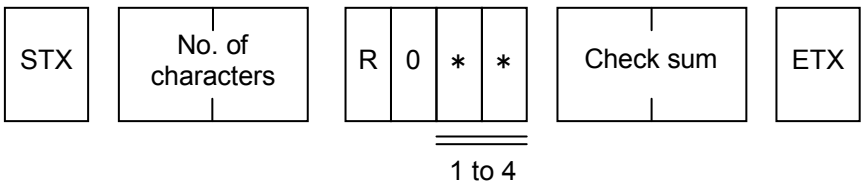

1. CT

This occurs only when stop mode is in "CONT" and NC program has executed the EOP step.
In case of error, this signal occurs only when restarted in "CONT" mode.
Usually, this is used for counting PCB production.

2. EP

This occurs only when stop mode is in "EOP" or "1STEP" and NC program has executed an EOP step.
Therefore, when an error has occurred at the final dispense step, this signal will not be generated until operation is by "EOP" or "1STEP" key.
This signal can be used to end production. In this case, R0CT is not output.

3. BDGD

In the bad mark sensing corresponding machine, this verifies with the bad mark sensor if the PCB is capable of being inserted before the actual insertion action.
If it is found to be capable of being inserted, this signal is generated.

4. BDNG

In the bad mark sensing corresponding machine, if the verification results find the PCB as being incapable (inhibit) of being inserted, this signal is generated.

■ Command output example

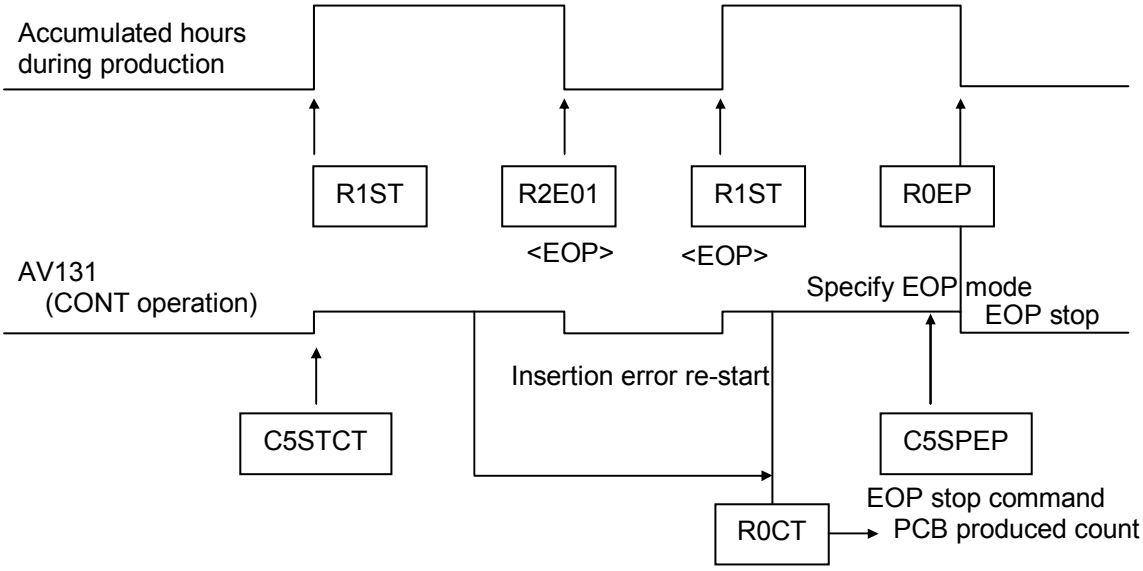

■ Condition

- Can be used in optional specification.
- Valid in ONLINE mode only.

5.2.2 Operation mode information: R1

The R1 command is to let the host computer know when an operator or host computer is positively operating the control switches on the AV131.

■ Data details

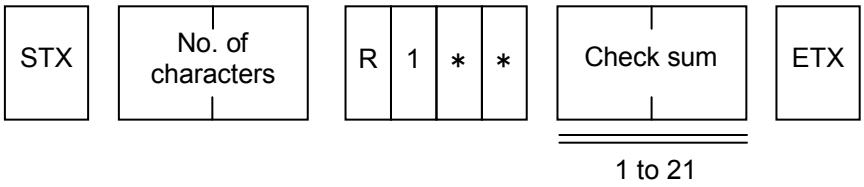

1. OL or FL

These commands inform the host computer that the control mode of AV131 is the online (OL) or off-line (FL). This is generated when mode select switch on the main control panel of AV131 is switched over, or immediately after the power is turned ON.

2. ES

When the power is shut down by an emergency stop, R1ES command is outputted by the contact input of ES switch.

3. ST

This command informs the host computer that AV131 has started because the START switch on the main control panel was pressed or a C5ST command was input from the host computer. This is the signal output when AV131 has started operation. This signal is also output at the time of restart.

4. SP

This command shows that AV131 has stopped in conditions other than error.

Actually, it is the normal stopping of 1. Step operation other than at the final print step.

When the NC program switch is “EOP”, this command is not sent and R0EP command is output to distinguish from stop in EOP stop mode.

5. PS

When a PCB is transferred to the start of the loader rail, the PCB detector 2LS goes ON. When this switch goes ON (when the PCB is correctly set on the loader rail), this command is output. When inputting a C5ST start to the AV131, It is necessary to check that this R1PS command has been previously input to the host computer.

6. RE

When the “OPERATION RESET” switch on the main control panel has been pressed by the operator or the C5RE command has been executed by the host computer.

7. PW

In the NC program when G1T4 command is executed, X-Y-Z axes return to origin point and PCB loading is conducted on X-Y table. At this time, if there is no PCB at the head of the loader rail (that is, if R1PS command has not occurred prior to it), it is in the PCB arrival waiting condition. In such conditions, this command occurs.

This signal also occurs when it is impossible to convey away the PCB on the loader rail because the unloader stocker is full, and PCB loading is impossible.

8. PE

This command shows that the above-mentioned R1PW command condition has been eliminated.

That is, after R1PW has occurred, this command occurs when PCB arrived at head of loader rail, or when PCB has been discharged to unloader.

9. OC

This is the command informing the host computer that the XY axes started origin return action and completed the action through inputting C5UP command (PCB sweep out command) from the host computer.

10. UP

Sweeps out PCB in XY tables through inputting C5UP command from host computer. This is the command informing the host computer of the C5UP action completion when PCB sweep out was completed.

11. RC
This occurs when insertion error occurs or correction start from C5TRC command or from control panel begins.

12. LD
This command is sent when the loading operation has been completed.

13. LE
This command occurs, with the magazine stocker connected to the loader side, when PCB become unable of being fed because of the rack being empty.

14. LF
This command occurs, with the magazine stocker connected to the loader side, when the empty racks already finished supplying the PCB are fully stocked and the following rack cannot be set.

15. LS
This command occurs, with the magazine stoker connected to the loader side, when PCB in the rack have all been supplied and the following rack setting completes at the PCB supply position.

16. LO
This command occurs. In the condition above, when the empty rack already finished supplying all the PCB is swept out.

17. UE
This command occurs, with the magazine stocker connected to the unloader side, when the empty racks to contain PCB runs out, thus the PCB become unable of being fed.

18. UF
This command occurs, with the magazine stocker connected to the unloader side, when the racks finished stocking the PCB became full and the following rack cannot be set (unable stock PCB).

19. US
This command occurs, with the magazine stocker connected to the unloader side, when the empty rack is set at the PCB containing position.

20. UO
This command occurs, with the magazine stocker connected to the unloader side, when the rack fully containing the PCB and the rack is swept out to the unloading position.

21. TE
This command is sent when width adjustment has been completed normally.

■ Command output example

● PCB arrival waiting

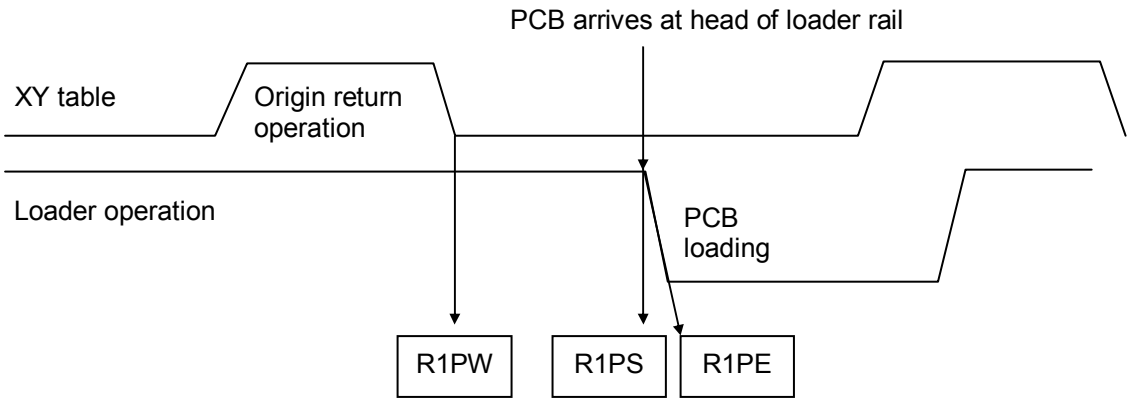

- 1 STEP start command

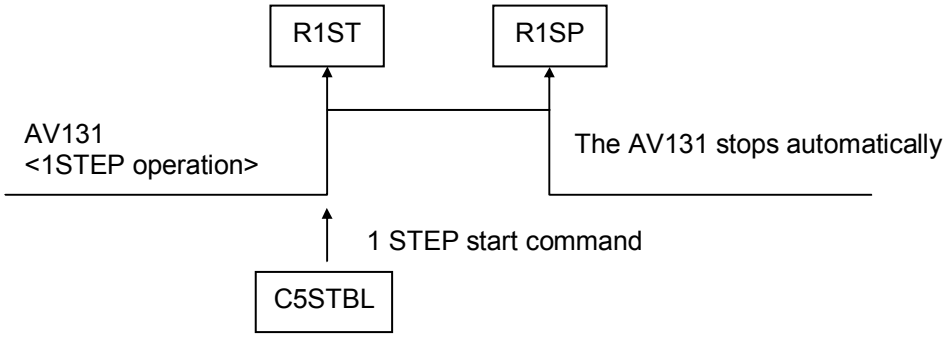

■ Condition

- Valid in ONLINE mode only in the commands except for R1FL and R1ES.

5.2.3 Machine Error Information: R2

There are many error detections while AV131 is in operation, and they have the function of stopping AV131 automatically.
This R2 command is to inform the host computer of these errors.

■ Data details

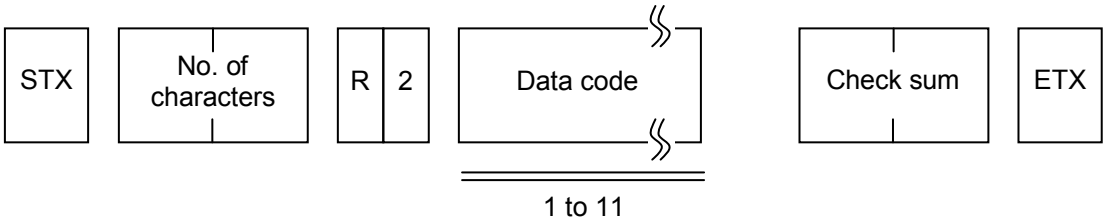

In the error information, a 3-digit step number (N) is added as follows:
NC data step number (N: 3 digits), parts feeder number (Z: 3 digits), M command (3 digits) and T command (3 digits) are added to error information.
Data code part is applicable as the following. (x represents numbers 0- 9.)

■ Data codes

1. E01 (Sxxx) NxxxZxxxMxxxTxxx
   This is an error information showing that the insertion error occurred and the machine made a stop.
   Data thereafter E01 is the NC data that the insertion error has occurred.
2. E02 (Sxxx) NxxxZxxxMxxxTxxx
   This is an error information showing that the anvil short occurred and the machine made a stop.
3. E03 (Sxxx) NxxxZxxxMxxxTxxx
   This is an error information showing that parts exhaustion error occurred and the machine made a stop.
   Z number represents the parts empty feeder number.
4. E04 (Sxxx) NxxxZxxxMxxxTxxx
   This is an error information showing that the PCB guide error occurred and the machine made a stop.
5. E05 (Sxxx) NxxxZxxxMxxxTxxx
   This is an error information showing that the error occurred regarding the PCB loading onto XY table (such as carry error, positioner error).
6. E06 (Sxxx) NxxxZxxxMxxxTxxx
   This is an error information showing that the cut mistake error occurred on axial parts and the machine made a stop.
   (The information is not used for the current AV131 model.)

7. E07 (Sxxx) NxxxZxxxMxxxTxxx <X, Y, ZL, ZR, WH, WA, V>
This is an overrun information generated when any axis runs over the + limit.
The letter <> indicates the axes which run over the limits to stop.

8. E08 (Sxxx) NxxxZxxxMxxxTxxx
This is an error information generated in the following cases:
(a) PCB loading waiting error occurs.
(b) Head starts rotation, and does not return to the head origin more than 15 seconds after the deviation from the origin.

9. E09 (Sxxx) NxxxZxxxMxxxTxxx
This is an error information occurring when the Z axis stops at the position other than the slit.

10. E10 (Sxxx) NxxxZxxxMxxxTxxx <X, Y, ZL, ZR, θH, θA, WH, WA., U, V>
This is an interlock information of each axis.
The letter <> indicates the axis which stopped on account of interlock error.

11. E16 (Sxxx) NxxxZxxxMxxxTxxx
This information is generated when the warning error (such as parts exhaust warning) occurs; however, it does not cause the machine to stop.

=REMARKS=

- (Sxxx) is added only when step & repeat program is being executed.

■ Condition

- Valid in ONLINE mode only.

5.2.4 Recovery Result Information : R3

In AV131, if the insertion error occurs, the re-mounting automatically becomes possible. This action becomes possible through the host computer, too, by using C5STRC command. This command indicates whether or not the recovery mounting was made normally.

■ Data details

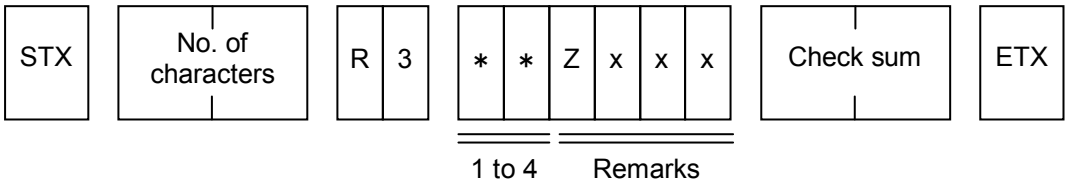

1. GD
Indicates the recovery action during error was normal.

2. G2
Not used.

3. NG
Indicates the recovery action during error was not normal.

4. N2
Not used.

=REMARKS=

Z number during the recovery action indicates the feeder No.; however, if Z axis does not move during the recovery action, this number will not be output.

6. SPC

6.1. General

D79HEC-58-010-A0

The SPC (Statistical Process Control) system manages the machines via the host computer.
It responds to various commands besides host applicability.

1. Executes commands from the host computer despite operating mode provided by the machines.
- C5 command is available at on-line only.
  The real time command is not executed in semi-auto and manual mode.

=HINT=
<R1OL/R1FL commands issued at switching to online/off-line>
For SPC specifications, switching to online/off-line is not allowed.
Communication mode is always online. To judge if the C5 command is available, however, R1OL/R1FL commands are issued as follows.

After change / Before change	AUTO	SEMI	MANU
AUTO		R1FL	R1FL
SEMI	R1OL		-----
MANU	R1OL	-----	

2. Sends out the real time commands which indicate the machine status.
- Run, Ready or Error mode is indicated.
- There is no guarantee of the context between this command and the command which indicates the events.

3. Receives distinct mark information from the host and reduces a sensor positioning time.

4. Detailed error code (the error code displayed on the operation screen) is added to the end of the R2 command. (Except part of error codes)

5. Commands used to delete data in the machines are added.
Data that can be deleted are:
- NC program
- Parts Data program
- Board program

The NC program, Parts Data program and board program which are currently being selected cannot be deleted.

6.2. Commands Description

D79HEC-58-020-A0

6.2.1 R1RU

Command	Function
R1RU	Run - machine status notification

◆ Protocol

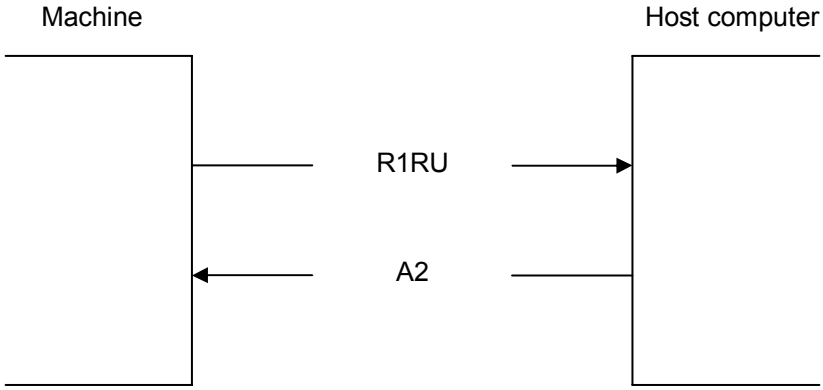

◆ Function

This command is sent when the machine changes from Ready to Run status.

6.2.2 R1RD

Command	Function
R1RD	Ready - machine status notification

◆ Protocol

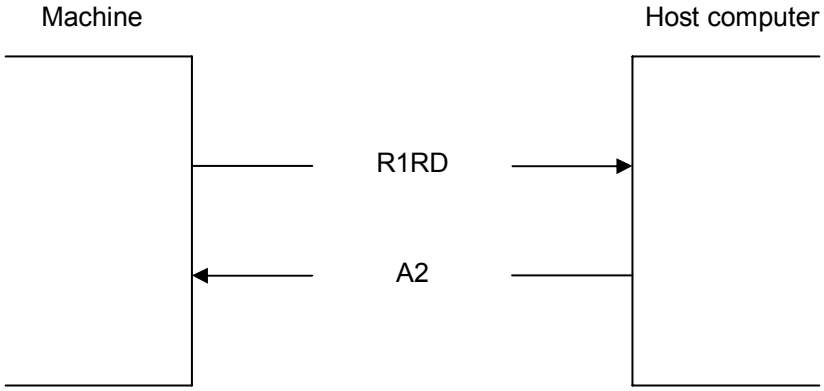

◆ Function

This command is sent when:

- Status changes from Run to Ready.
- Status changes from Stop to Ready.

6.2.3 C0RP

Command	Function
C0RP	Deletes a NC program

◆ Protocol

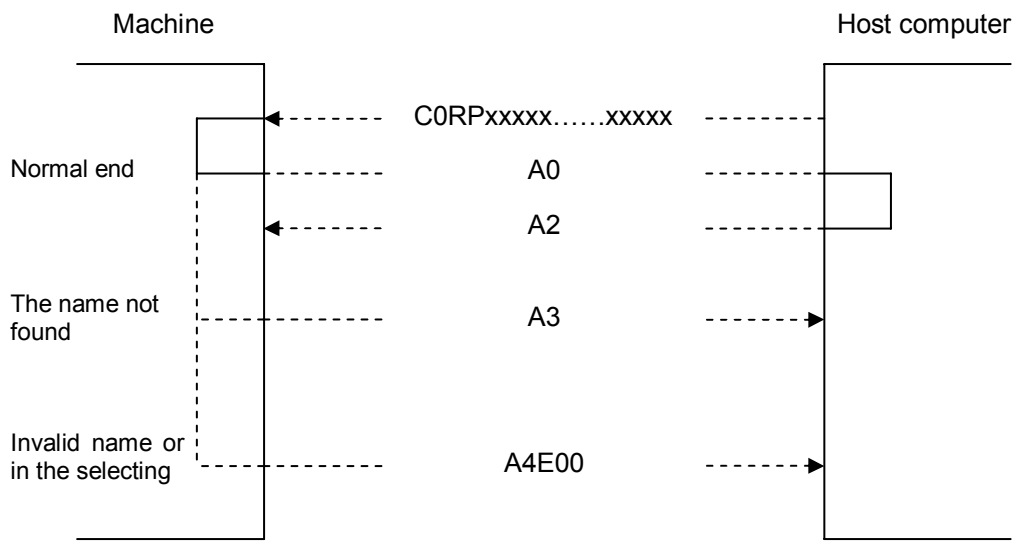

◆ Function

Deletes the specified NC program.

◆ Command

C 0 R P x x x x x x x x x x x x x x

NC program name (Up to 15 alphanumeric characters)

◆ Data

None

=HINT=

(1) If the specified program does not exist, the A3 command is returned.
(2) If a program name with the illegal character string is specified, A4E00 is returned.
(3) If the program in the selecting is specified, A4E00 is returned.

6.2.4 C0RD

Command	Function
C0RD	Deletes a Parts Data program

◆ Protocol

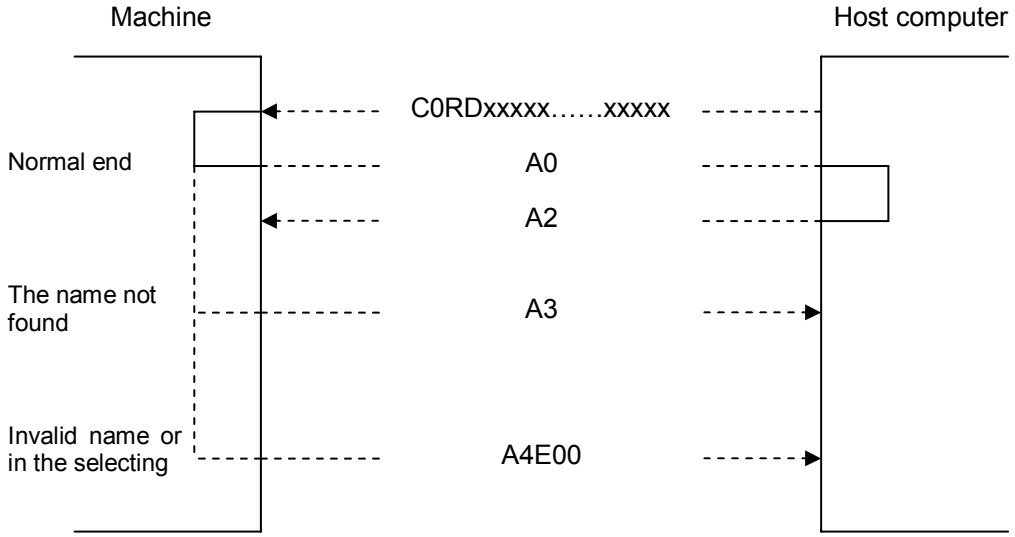

◆ Function

Deletes the specified Parts Data program.

◆ Command

C 0 R D x x x x x x x x x x x x x x

Array program name (Up to 15 alphanumeric characters)

◆ Data

None

=HINT=

(1) If the specified Parts Data program does not exist, A3 command is returned.
(2) If the specified Parts Data program name is an illegal character string, A4E00 command is returned.
(3) If the specified Parts Data program is being selected, A4E00 command is returned.

6.2.5 C0RC

Command	Function
C0RC	Deletes a board program

◆ Protocol

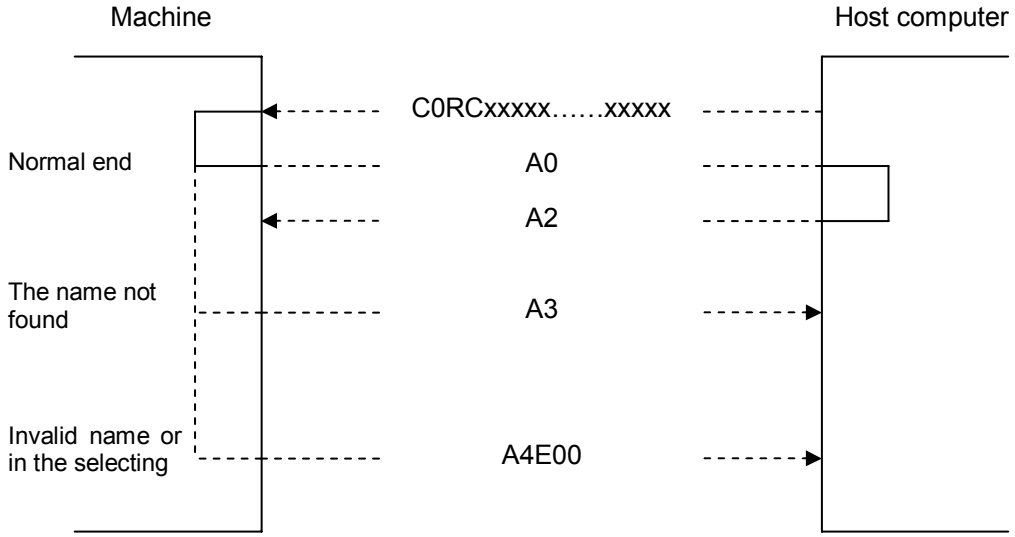

◆ Function

Deletes the specified board program.

◆ Command

C 0 R C x x x x x x x x x x x x x x x

Board program name (Up to 15 alphanumeric characters)

◆ Data

None

=HINT=

(1) If the specified program does not exist, the A3 command is returned.
(2) If a program name with the illegal character string is specified, A4E00 is returned.
(3) If the program in the selecting is specified, A4E00 is returned.

6.2.6 C2ST

Command	Function
C2ST	Machine status monitoring

◆ Protocol

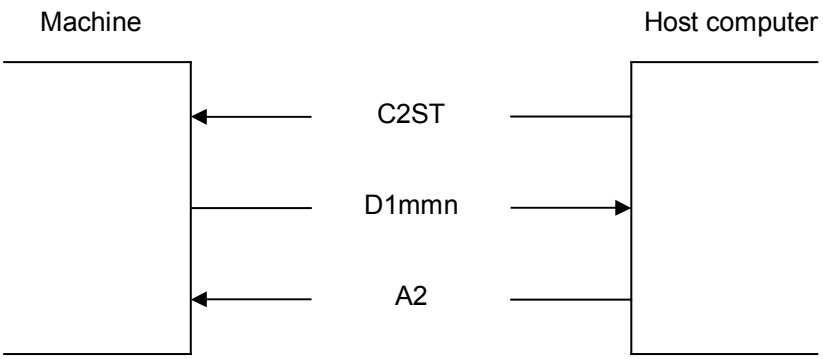

◆ Function

This command requests the machine to send its current status to the host computer.

◆ Data

- Execution step data -

D 1 m m n

0 : Off-line 1 : Online
0 0 : Machine is in the Run status
0 1 : Machine is in the Ready status
0 2 : Machine is in the Error status

Status	Information
Run	● SEMIAUTO operation ● AUTO operation (including PCB waiting)
Ready	● Normal stop (neither Run nor Error stop) ● From RESET" is pressed in the Error status (except safety stop) until the Run status resumes (or until safety stop is activated). ● From the Error status (safety stop) is cleared until the Run status resumes. ● From the status changes from Run to Error due to pickup error or recognition error until the Run status resumes.
Error	● From the status changes from the Run to Error (including part exhaustion) until RESET" is pressed. (A insertion error and recognition error, however, are not counted as an error stop.) ● Safety stop.

If RESET" is pressed during Error stop, the status changes to Ready whether the error has been cleared or not. (Exception: Safety stop)

6.2.7 C3P

Command	Function
C3P	Reference and change of the selected NC program name

◆ Protocol

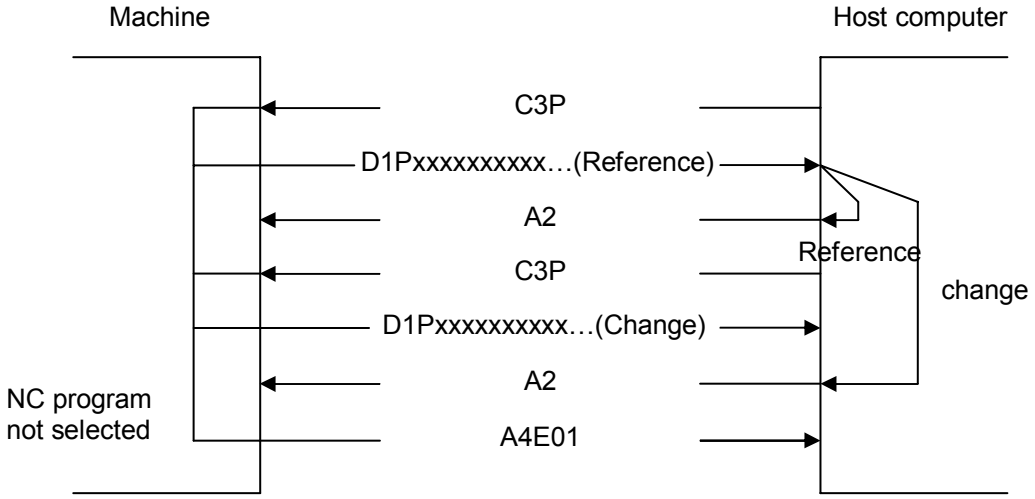

◆ Function

The NC program in the selecting is sent from the machine to the host computer.
If no NC program is selected, A4E01 is sent to the host.

◆ Data

D 1 P x x x x x x x x x x x x x x x
NC program name (Up to 15 alphanumeric characters)

6.2.8 C3D

Command	Function
C3D	Reference and change of the selected Parts Data program name

◆ Protocol

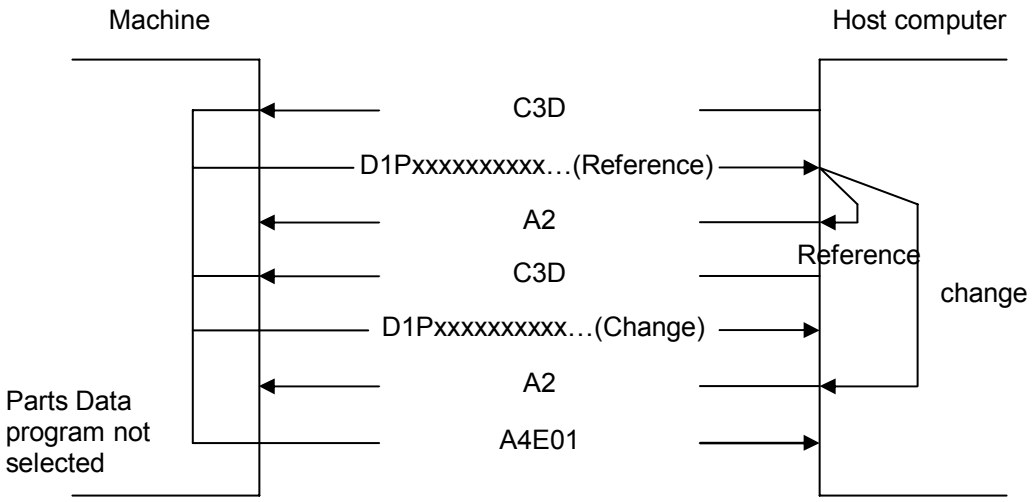

◆ Function

The Parts Data program in the selecting is sent from the machine to the host computer.
If no Parts Data program is selected, A4E01 is sent to the host.

◆ Data

D 1 D x x x x x x x x x x x x x x

Parts Data program name (Up to 15 alphanumeric characters)

6.2.9 C3C

Command	Function
C3C	Reference and change of the selected board program name

◆ Protocol

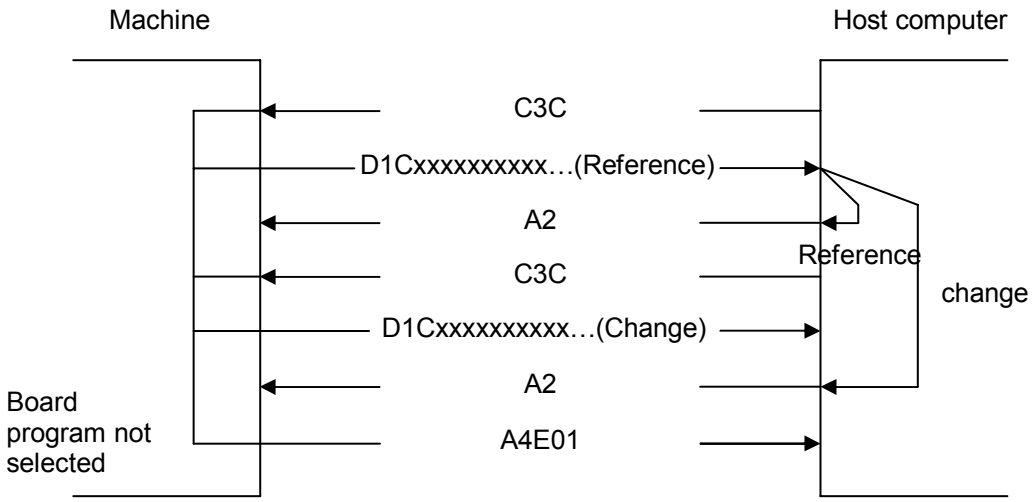

◆ Function

The board program in the selecting is sent from the machine to the host computer.
If no board program is selected, A4E01 is sent to the host.

◆ Data

D 1 C x x x x x x x x x x x x x x
Board program name (Up to 15 alphanumeric characters)

6.2.10 C3U

Command	Function
C3U	Reference and change of the selected Parts Data program name

◆ Protocol

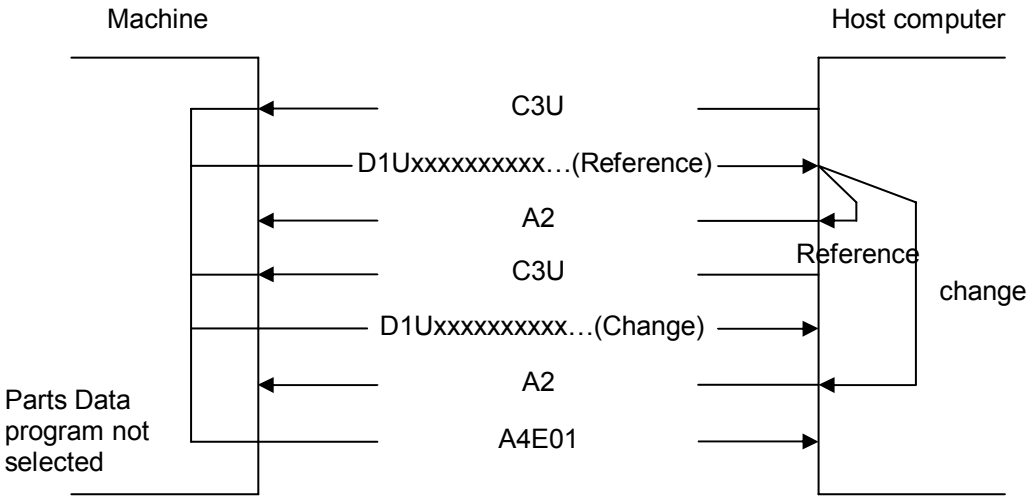

◆ Function

The Parts Data program in the selecting is sent from the machine to the host computer.
If no Parts Data program is selected, A4E01 is sent to the host.

◆ Data

D 1 U x x x x x x x x x x x x x x

Parts Data program name (Up to 15 alphanumeric characters)

6.2.11 C5BD

Command	Function
C5BD	Designation of a bad pattern

◆ Protocol

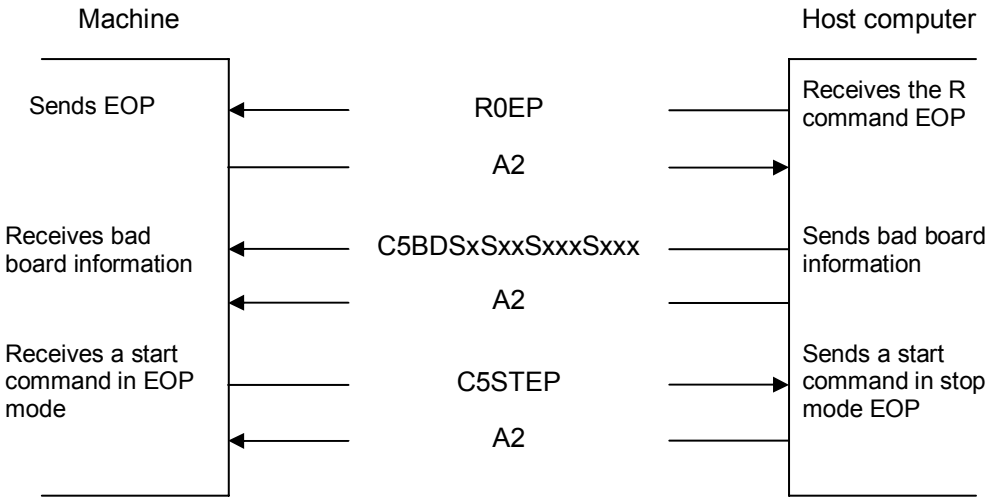

=HINT=

The machine can be started by the C5STEP command or start commands from the control panel or host computer (other than C5STEP).
The notified C5BD command is available also at machine start.
Refer to the `Operation mode' for details.

◆ Function

The host computer transmits bad board information to all the machines.
The machine will accordingly modify its placement function to compensate.
The host computer transmits bad board information to each the machine to stop each from positioning to detect distinct marks. This reduces a line cycle time.

◆ Other notes

(1) The machine must be stopped for the C5STEP command task (starts in EOP mode).
(2) If the C5BD command is sent without the suffix Sxxx, all patterns are regarded as `good' boards.
(3) The machine uses the most recent C5BD command if more than one commands are sent.
(4) The length of the C5BDSxxxSxxx command is variable.

◆ Format

C 5 B D S x x x S x x x S x x x x

S x x x : 1 ~ 500 (panel No. of bad board)

Panel No. : NC step No. of the S & R instruction in NC program.
The pattern judged as a distinct mark is notified.
The step designated as a skip step is also counted as a step No.
The maximum of the command is 253 characters, including the 4 characters of `C5BD'.

= CHECK=

The host computer can send bad board information with one command only expressed in the C5BD form.

Ex. If pattern No. 1, 4, 99 and 101 have the distinct marks, the command would be:
C 5 B D S 1 S 4 S 9 9 S 1 0 1

◆ Operation mode

This system will be effective in all the machine starts on condition that the operation mode is ONLINE after receiving the C5BD command from the host computer (refer to the note below). If the machine starts in COUN mode, however, C5BD information will be effective only for the first PC board and operation will follow the contents of the distinct mark instruction step in the NC program from the second PC board onwards.

If the machine starts in a mode other than ONLINE (after receiving the C5BD in ONLINE mode, changed to AUTO mode to start the machine), C5BD information will be disabled and operation will follow the distinct mark instruction step in the NC program. The C5BD command received in a mode other than ONLINE is considered as an error (A4E00 - operation error).

=HINT=

The machine start means that the C5STCT, C5STEP and C5STBL start from the host computer and that the one step mode start, EOP mode start and CONT mode start by pressing the start key on the control panel.

◆ Condition for receiving command

If any of the following condition arises, the C5BD command will send an error message to the host computer and the notified data will be disregarded.

(1) Command received when a machine is not in ONLINE: A4E00 (Operation error)
(2) Panel No. in bad board information exceeds the tolerant maximum pattern number (Max. 500 patterns for this machine): A4E00 (Operation error)
(3) After checking the data field (Sxxx) following C5BD, each xxx of Sxxx - Sxxx has non-numerical characters: A4E00 (Operation error)
(4) The NC program or array program is not selected: A4E00 (Operation error)
(5) The machine is in operation: A4E00 (Operation error)

=HINT=

When the panel No. in bad board information sent from the host computer exceeds the maximum number of patterns contained in the active NC program, the selected NC program patterns will be only accepted. The others will be ignored but no error.

◆ Action specification

Action condition caused by receiving the C5BD command differs depending upon whether the distinct mark instruction step exists in the active NC program or not.

Distinct mark detection step in the selected NC program	Receiving the C5BD command	Equipment action
Exists (No S & R step is the same)	Exists	Action specified by the C5BD command is performed. Bad board information based on the NC program will not be detected.
None	Exists	All the patterns are regarded as good boards, and the C5BD command is disregarded. (No error is caused by the C5BD command. Data receiving ends normally.)
Exists (No S & R step is the same)	None	Bad board information based on the NC program is detected, and action according to the detected information is performed.
None	None	All patterns are regarded as good boards.

- Even if the distinct mark instruction step of the selected NC program assumes the skip designation, the distinct mark detection step is judged as `exists', and the C5BD command is accepted.
- If any distinct mark step exists in the NC program without S & R step, the C5BD command is available. (The C5BDS1, entire PC board is regarded as the first pattern.)
- Bad board information is cleared when the power is turned OFF, RESET is pressed or a program is selected. When the power is turned OFF/ON or RESET is pressed during the recovery data guarantee, bad board information will not be cleared.

Start after the power is turned OFF/ON

Operation may continue according to the recovery data guarantee.
(PC board in process will continue to be produced.)

7. APPENDIX

7.1. AV131 HOST Command Table

D79HEC-09-030-A0

E: AV131 H: Host computer

Item	Com-mand	Sub-com-mand	Data	Name	Remarks	Commu-nication direction	Stand-ard	Option-al
C command	C0	P	Program name	NC data download start	Starts NC data download.	H → E	○	
		U	Program name	Parts data download start	Starts parts data download.	H → E	○	
		G	None	Individual machine data download start	Starts individual machine data download.	H → E	○	
		F	Program name	Program offset download start	Starts program offset download.	H → E	○	
		Z	None	Parts set number download start	Starts parts set number download.	H → E	○	
	C1	P	Program name	NC data upload start	Starts NC data upload.	H → E	○	
		U	Program name	Parts data Upload start	Starts parts data upload.	H → E	○	
		C	Program name	PCB data upload start	Starts PCB data upload.	H → E	○	
		G	None	Individual machine data upload start	Starts individual machine data upload.	H → E	○	
		F	Program name	Program offset upload start	Starts program offset upload.	H → E	○	
		M	Total designation	Production information (machine) upload start	Starts production information (machine) upload.	H → E	○	
		N	Total designation	Production information (NC data) upload start	Starts production information (NC data) upload.	H → E	○	
		D	Total designation	Data information upload start	Starts step information upload.	H → E	○	
		Z	Total designation	Feeder information upload start	Starts feeder information upload.	H → E	○	
		R	Total designation	Rotary chuck information upload start	Starts rotary chuck information upload.	H → E	○	
		T	None	NC data directory upload start	Starts NC data directory upload.	H → E	○	
		S	None	Parts data directory upload start	Starts parts data directory upload.	H → E	○	
		RC	None	PCB data directory upload start	Starts PCB data directory upload.	H → E	○	
		ZM	None	Refer to Z division mode, L/R selection	Refers to Z division mode and L/R selection.	H → E	○	
	C2	SI	Address	SC input monitoring	Monitors SC input.	H → E	○	
		SO	Address	SC output monitoring	Monitors SC output.	H → E	○	
		NI	Address	MMC input monitoring	Monitors MMC I/O input.	H → E	○	
		NM	Address	MMC memory monitoring	Monitors MMC memory.	H → E	○	
		II	Address	MMI input monitoring	Monitors MMI I/O input	H → E	○	
		IM	Address	MMI memory monitoring	Monitors MMI memory.	H → E	○	
	C3	P	Program No.	NC program name inquire/alter	Inquires and alters NC program name.	H → E		○
		U	Program No.	Parts data name inquire/alter	Inquires and alters parts data name.	H → E		○

Item	Com-mand	Sub-com-mand	Data	Name	Remarks	Commu-nication direction	Stand-ard	Option-al
C command	C4	AL	None	NC data inquire/alter	Inquires and alters execution program NC data.	H → E		○
		IN	None	NC data insert	Inserts in execution program NC data.	H → E		○
		DL	None	NC data delete	Deletes execution program NC data.	H → E		○
		PA	None	Parts data inquire/alter	Inquires and alters execution program parts data.	H → E		○
		PD	Program No.	NC program delete	Deletes designated NC program.	H → E		○
		UD	Program No.	Parts program delete	Deletes designated parts program.	H → E		○
		CD	Program No.	PCB data program delete	Deletes designated PCB data program.	H → E		○
	C5	ST	None	Start	Starts machine without changing stop mode.	H → E	○	
		ST	BL	1STEP start	Switches to 1 STEP stop mode and starts.	H → E	○	
			EP	EOP start	Switches to EOP stop mode and starts.	H → E	○	
			CT	CONT start	Switches to CONT stop mode and starts.	H → E	○	
			RC	Recovery start	Executes recovery.	H → E	○	
		SP	BL	1STEP stop	Switches to 1 STEP stop mode.	H → E	○	
			EP	EOP stop	Switches to EOP stop mode.	H → E	○	
			CT	CONT stop	Switches to CONT stop mode.	H → E	○	
			HT	HALT command	Inhibits START key on operation panel.	H → E	○	
		RE	None	Reset command	Executes reset.	H → E	○	
		LP	None	PCB removal inhibit command	Inhibits PCB removal from magazine.	H → E	○	
		UP	None	PCB sweep out command	Sweeps out PCB from XY table.	H → E	○	
		SK	None	Unloader magazine sweep out command	Sweeps out magazine from unloader.	H → E		○
			UM	Unloader magazine sweep out command	Sweeps out magazine from unloader.	H → E		○
			LM	Loader magazine sweep out command	Sweeps out magazine from loader.	H → E		○
		O1	None	ONLINE switching	Lights ONLINE operation lamp.	H → E	○	
		O2	MN	MANUAL switching	Switches MANUAL mode.	H → E	○	
			SA	SEMIAUTO switching	Switches SEMIAUTO mode.	H → E	○	
			FA	AUTO switching	Switches AUTO mode.	H → E	○	
		SE	P＊＊＊	NC data select	Selects NC data execution program.	H → E	○	
			U＊＊＊	Parts data select	Selects parts data execution program.	H → E	○	
			C＊＊＊	PCB data select	Selects PCB data execution program.	H → E	○	
			Z＊＊＊	Z division mode and L/R select	Selects Z division mode and changes ZL/ZR.	H → E	○	
		WC	None	Width adjustment operation execution	Executes width adjustment (machine switching).	H → E	○	
			OG	Width adjustment origin return execution	Executes width adjustment origin return.	H → E	○	

7.1 AV131 HOST Command Table

Item	Com-mand	Sub-com-mand	Data	Name	Remarks	Commu-nication direction	Stand-ard	Option-al
A command	A0	None	None	Next data request	Requests next data in data transfer.	H ←→ E	○	
	A1	E00	None	Framing error	Error occurs in data receiving. Requests data resend.	H ←→ E	○	
		E01	None	Overrun error	Error occurs in data receiving. Requests data resend.	H ←→ E	○	
		E02	None	Parity error	Error occurs in data receiving. Requests data resend.	H ←→ E	○	
		E03	None	Check sum error	Error occurs in data receiving. Requests data resend.	H ←→ E	○	
		E04	None	Overflow error	Error occurs in data receiving. Requests data resend.	H ←→ E	○	
		E05	None	Format error	Error occurs in data receiving. Requests data resend.	H ←→ E	○	
	A2	None	None	Communication complete	Notifies communication completion.	H ←→ E	○	
	A3	None	None	No requested data	Notifies name discord with C1 command.	H ←→ E	○	
	A4	E00	None	Operation error	Received data except normal condition.	H ←→ E	○	
		E01	None	Protocol error	Sent different command in sending/receiving.	H ←→ E	○	
D command	D0	None	Various data	Data transfer	Used for C0-C2 command data transfer.	H ←→ E	○	
	D1	None	Various data	Data transfer	Used for C3-C4 command data transfer.	H ←→ E	○	
R command	R0	CT	None	EOP pass	Occurs in passing through EOP step.	H ← E	○	
		EP	None	EOP stop	Occurs in stopping at EOP step.	H ← E	○	
		BDGD	Step No.	Bad mark GOOD	Occurs when bad mark sensing is GOOD.	H ← E	○	
		BDNG	Step No.	Bad mark NO GOOD	Occurs when bad mark sensing is NO GOOD.	H ← E	○	
	R1	OL	None	Online mode	Shows the machine is in online mode.	H ← E	○	
		FL	None	Offline mode	Shows the machine is in offline mode.	H ← E	○	
		ES	None	Power down	Shows the power is down.	H ← E	○	
		ST	None	Start	Shows the machine started production.	H ← E	○	
		SP	None	1 STEP stop	Shows the machine made 1 STEP stop.	H ← E	○	
		PS	None	PCB stock	Shows PCB was stocked on loader.	H ← E	○	
		RE	None	Reset	Shows the machine was reset.	H ← E	○	
		PW	None	PCB wait	Occurs when loading cannot be executed.	H ← E	○	
		PE	None	PCB wait released	Occurs when loading wait condition is released.	H ← E	○	
		OG	None	XY origin return completed	Occurs when XY returns to origin by PCB sweep out.	H ← E	○	
		UP	None	PCB sweep out completed	Occurs when all PCB on the table are swept out.	H ← E	○	
		RC	None	Recovery start	Shows recovery start.	H ← E	○	

Item	Com-mand	Sub-com-mand	Data	Name	Remarks	Commu-nication direction	Stand-ard	Option-al
R command	R1	LD	None	Loading completed	Occurs in loading completion.	H ← E		○
		LE	None	Loader magazine empty	Shows loader magazine is empty.	H ← E		○
		LF	None	Loader magazine full	Shows loader magazine is full.	H ← E		○
		LS	None	Loader magazine set	Shows loader magazine is set.	H ← E		○
		LO	None	Loader magazine sweep out	Shows loader magazine is swept out.	H ← E		○
		UE	None	Unloader magazine empty	Shows unloader magazine is empty.	H ← E		○
		UF	None	Unloader magazine full	Shows unloader magazine is full.	H ← E		○
		US	None	Unloader magazine set	Shows unloader magazine is set.	H ← E		○
		UO	None	Unloader magazine sweep out	Shows unloader magazine is swept out.	H ← E		○
		TE	None	Width adjustment normally complete	Shows width adjustment is completed normally.	H ← E		○
	R2	E01	(S＊＊)N＊＊＊Z＊＊＊M＊＊＊T＊＊＊	Insertion error	Shows machine stop by insertion error.	H ← E		○
		E02	(S＊＊)N＊＊＊Z＊＊＊M＊＊＊T＊＊＊	Anvil short error	Shows machine stop by anvil short error.	H ← E		○
		E03	(S＊＊)N＊＊＊Z＊＊＊M＊＊＊T＊＊＊	Parts exhaustion error	Shows machine stop by parts exhaustion error.	H ← E		○
		E04	(S＊＊)N＊＊＊Z＊＊＊M＊＊＊T＊＊＊	PCB guide error	Shows machine stop by PCB guide error.	H ← E		○
		E05	(S＊＊)N＊＊＊Z＊＊＊M＊＊＊T＊＊＊	Loader error	Shows machine stop by loader error.	H ← E		○
		E06	(S＊＊)N＊＊＊Z＊＊＊M＊＊＊T＊＊＊	Cut miss error	Shows machine stop by axial parts cut miss error.	H ← E		○
		E07	(S＊＊)N＊＊＊Z＊＊＊M＊＊＊T＊＊＊	Overrun error	Shows machine stop by axis limit overrun.	H ← E		○
		E08	(S＊＊)N＊＊＊Z＊＊＊M＊＊＊T＊＊＊	No error stop	Shows machine stop by causes other than error.	H ← E		○
		E09	(S＊＊)N＊＊＊Z＊＊＊M＊＊＊T＊＊＊	Z positioning error	Show Z axis stops at the position other than the slit.	H ← E		○
		E10	(S＊＊)N＊＊＊Z＊＊＊M＊＊＊T＊＊＊	Interlock error	Shows machine stop by interlock error.	H ← E		○
		E16	(S＊＊)N＊＊＊Z＊＊＊M＊＊＊T＊＊＊	Warning error	Shows warning error occurrence without machine stop.	H ← E		○

Item	Com-mand	Sub-com-mand	Data	Name	Remarks	Commu-nication direction	Stand-ard	Option-al
R command	R2	TE01	None	Width adjustment 1st-axis error	Shows machine stop by width adjustment 1st-axis error.	H ← E		○
		TE02	None	Width adjustment 2nd-axis error	Shows machine stop by width adjustment 2nd-axis error.	H ← E		○
		TE03	None	Width adjustment 3rd-axis error	Shows machine stop by width adjustment 3rd-axis error.	H ← E		○
		TE04	None	Width adjustment 4th-axis error	Shows machine stop by width adjustment 4th-axis error.	H ← E		○
		TE05	None	Width adjustment 5th-axis error	Shows machine stop by width adjustment 5th-axis error.	H ← E		○
		TE06	None	Width adjustment 6th-axis error	Shows machine stop by width adjustment 6th-axis error.	H ← E		○
		TE07	None	Width adjustment 7th-axis error	Shows machine stop by width adjustment 7th-axis error.	H ← E		○
		TE08	None	Width adjustment 8th-axis error	Shows machine stop by width adjustment 8th-axis error.	H ← E		○
		TE09	None	Width adjustment 9th-axis error	Shows machine stop by width adjustment 9th-axis error.	H ← E		○
	R3	GD	Pattern No.	Recovery GOOD	Shows recovery is OK.	H ← E		○
		NG	Pattern No.	Recovery NO GOOD	Shows recovery is NG.	H ← E		○

Notice

The contents of this document are subject to change without prior notification.

For the products or the technology, which are controlled items subject to the Foreign Exchange and Foreign Trade Law, the export permission according to the law is required when exporting from Japan or providing technological offerings.

Panasonic Factory Solutions Co., Ltd.

441-13, Nagahasu, Tateishi-cho, Tosu, Saga 841-8585, Japan

TEL +81-942-84-2644

1375, Kamisukiawara, Showa-cho, Nakakoma-gun, Yamanashi 409-3895, Japan

TEL +81-55-275-6222

© 2008 Panasonic Factory Solutions Co., Ltd. All Rights Reserved.
Unauthorized copying and distribution is a violation of the law.

Printed in Japan